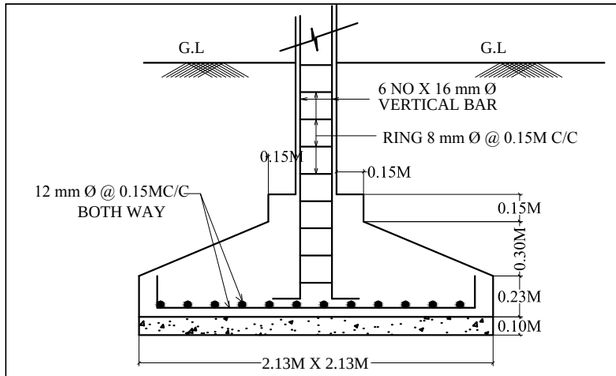

SECTION OF FOOTING .

SIZE - 2.13M X 2.13M

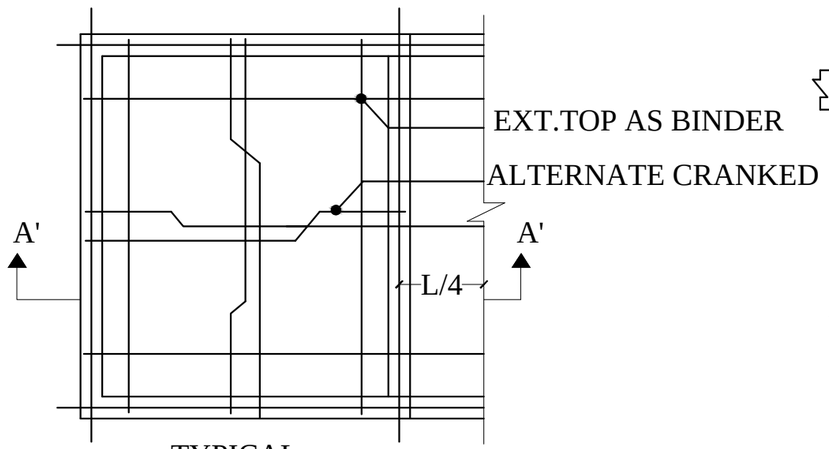

TYPICAL

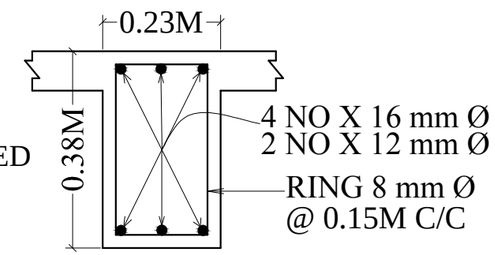

C.S. OF ROOF BEAM

SIZE - 0.23M X 0.38M

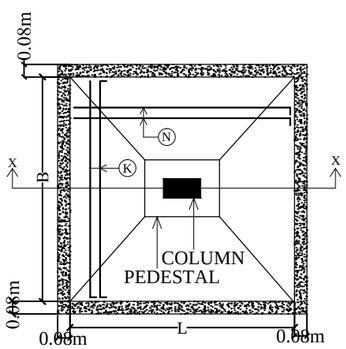

PLAN OF ISOLATED FOOTING

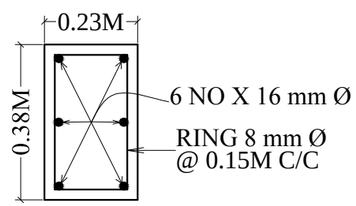

C.S. OF COLUMN .

SIZE - 0.23M X 0.38M

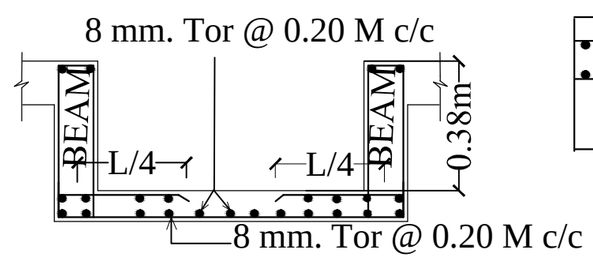

THICKNESS OF SLAB = 0.11m

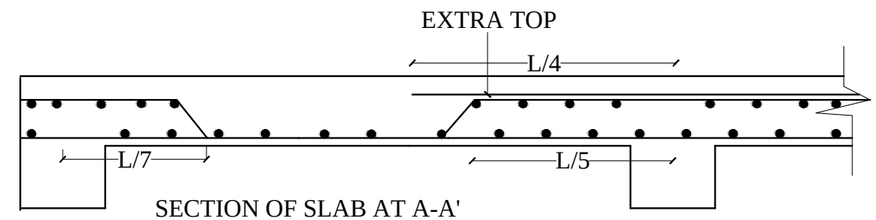

SECTION OF SLAB AT A-A'

Structure Detail