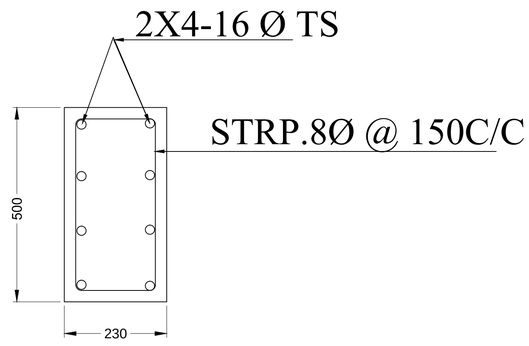

C/S OF COL.

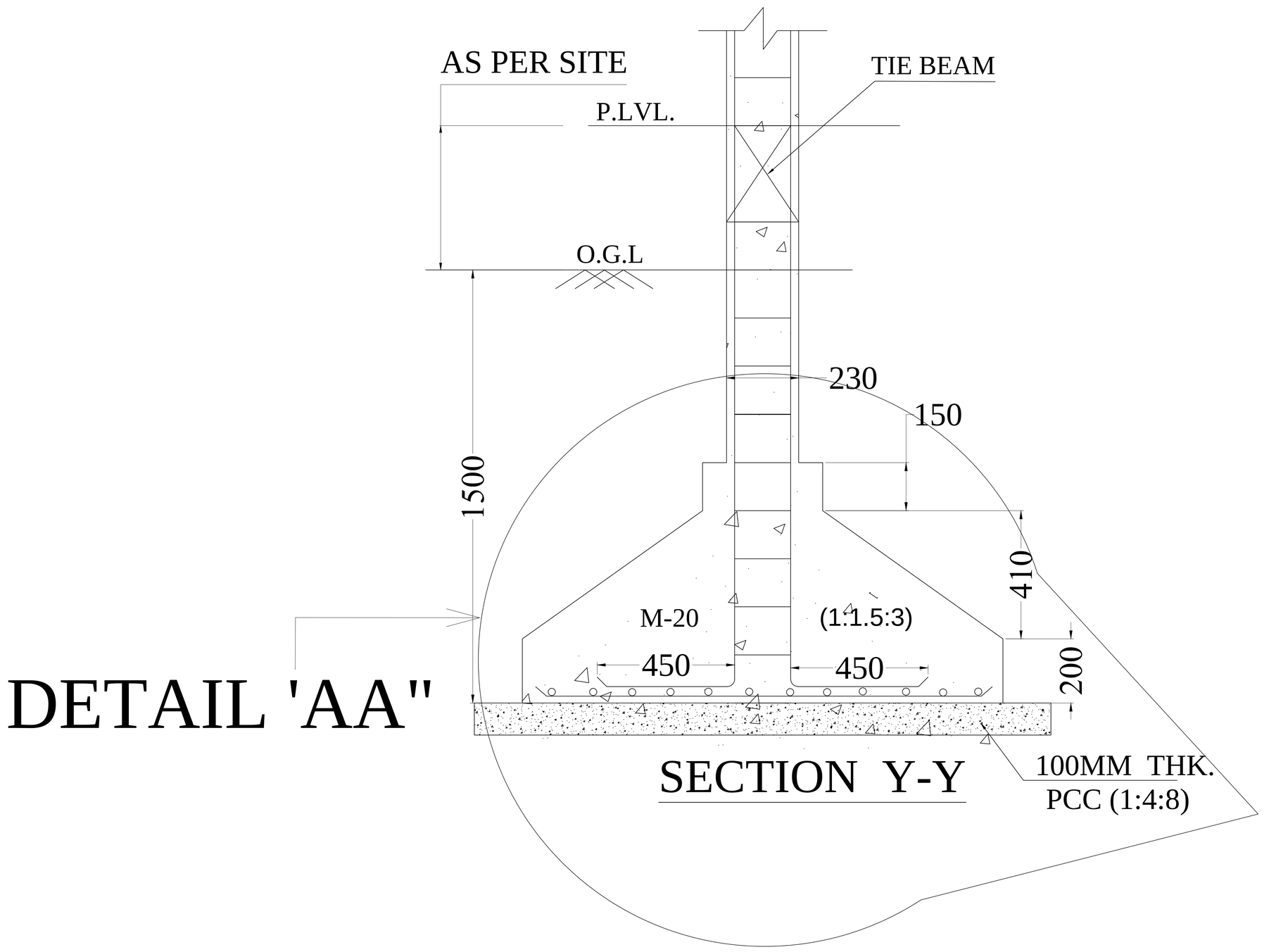

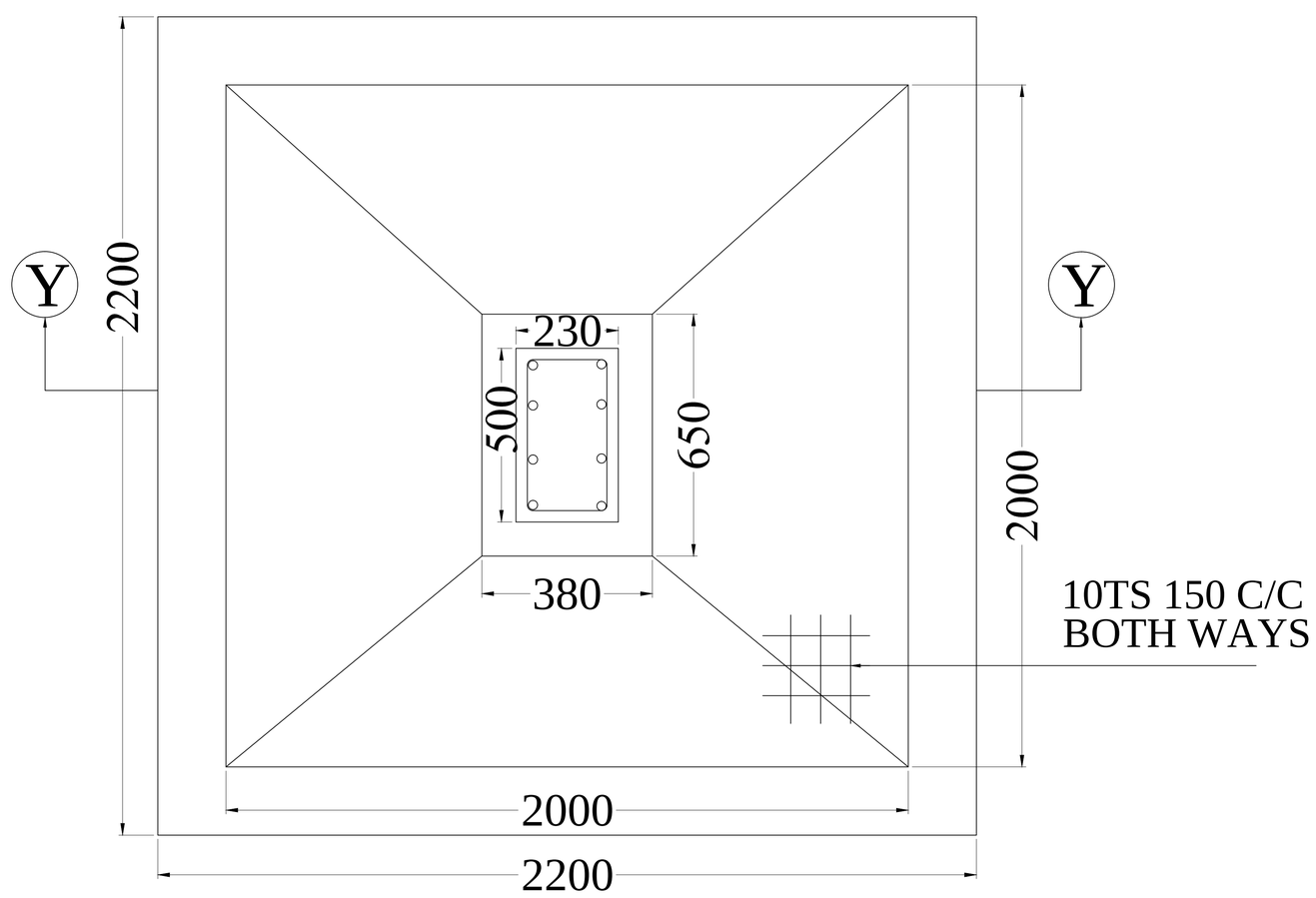

PLAN

Structure Detail