PRODUCED BY AN AUTODESK EDUCATIONAL PRODUCT

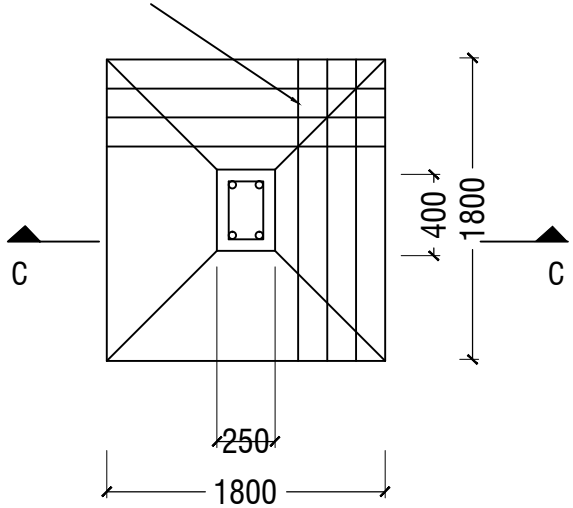

DETAIL OF FOUNDATION

(NTS)

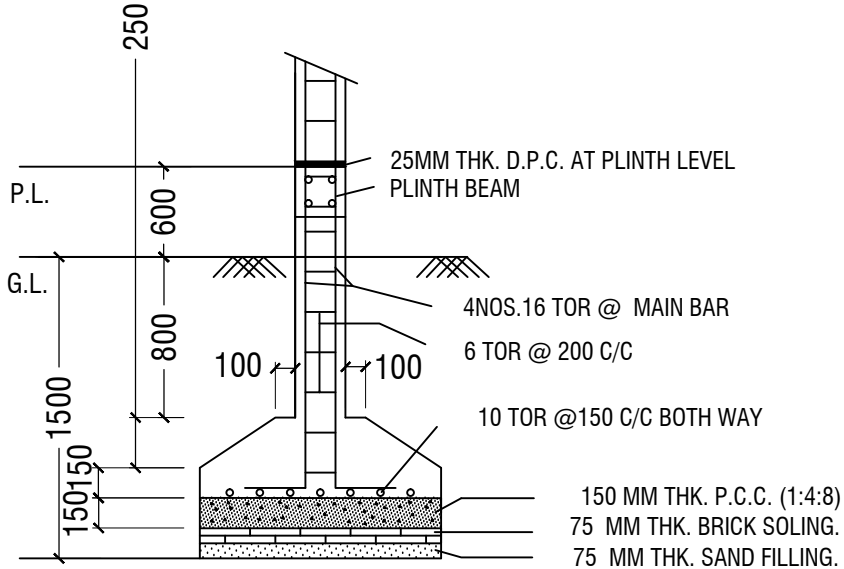

SECTION -CC

PRODUCED BY AN AUTODESK EDUCATIONAL PRODUCT

PRODUCED BY AN AUTODESK EDUCATIONAL PRODUCT

PRODUCED BY AN AUTODESK EDUCATIONAL PRODUCT