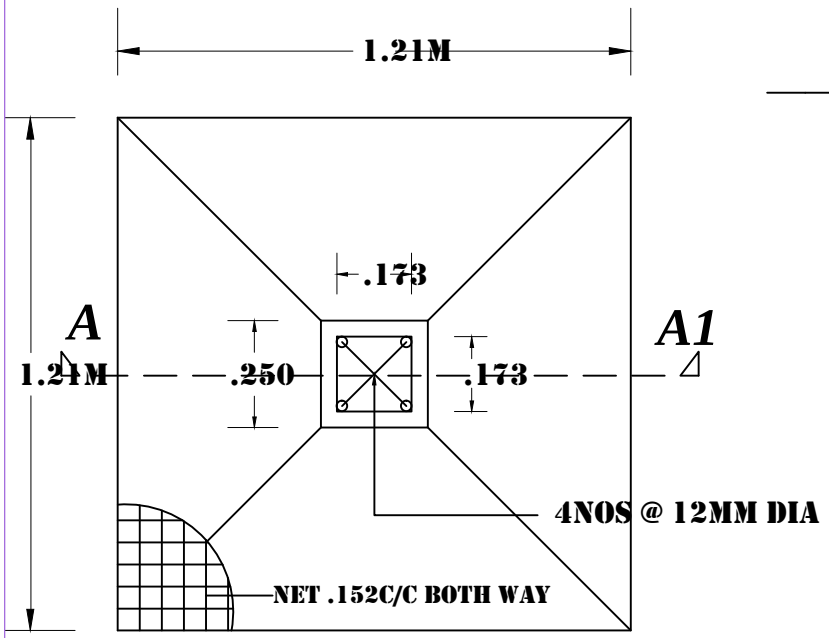

PLAN OF FOUNDACTION

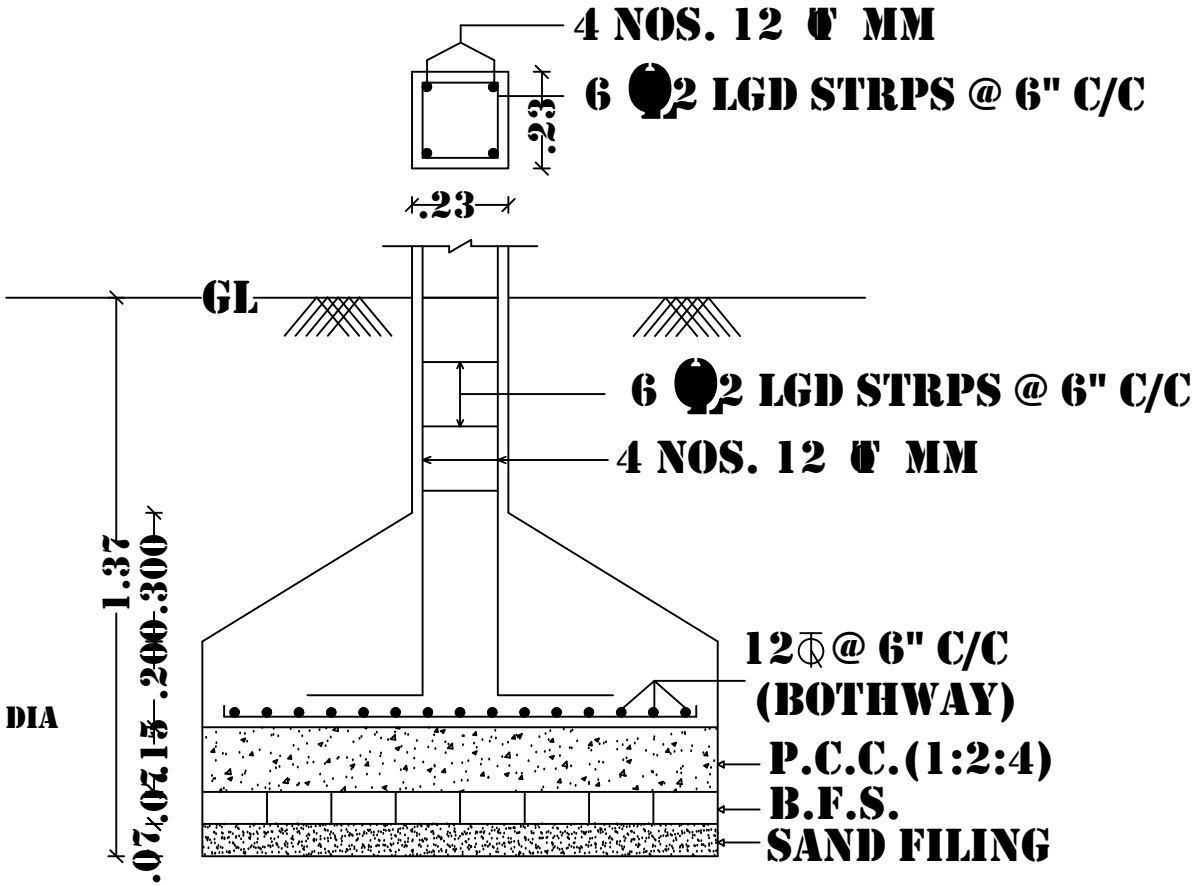

SECTION ON C-C'

Structure Detail