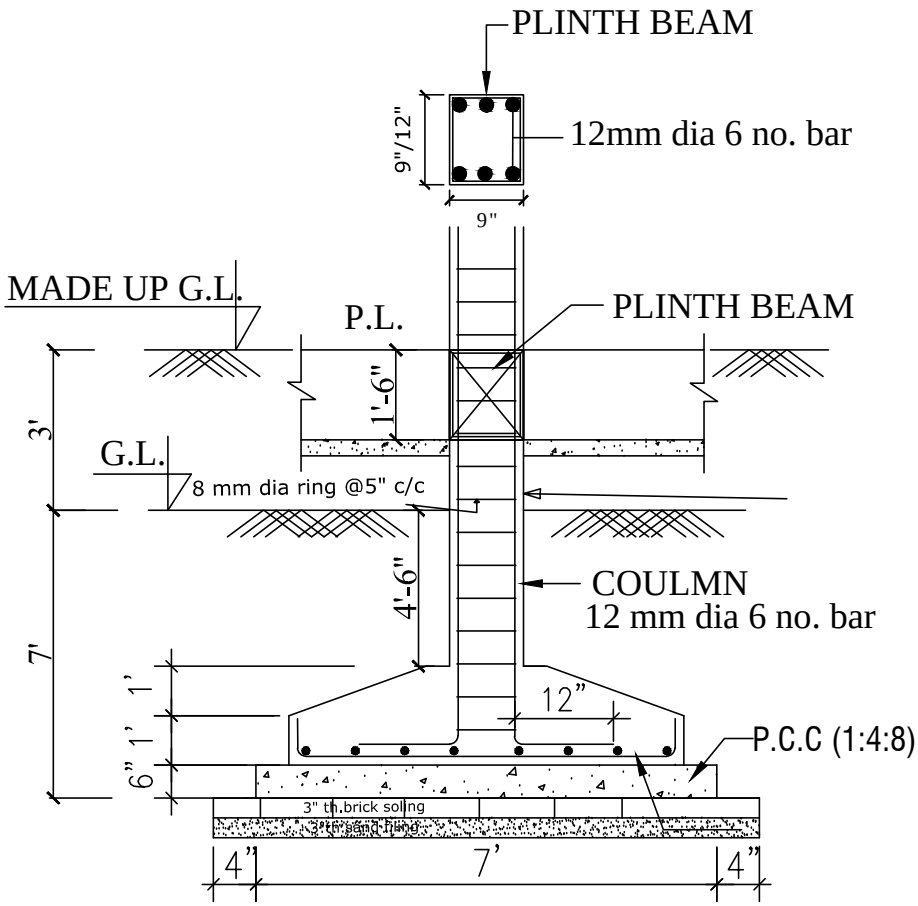

SECTION -AA'

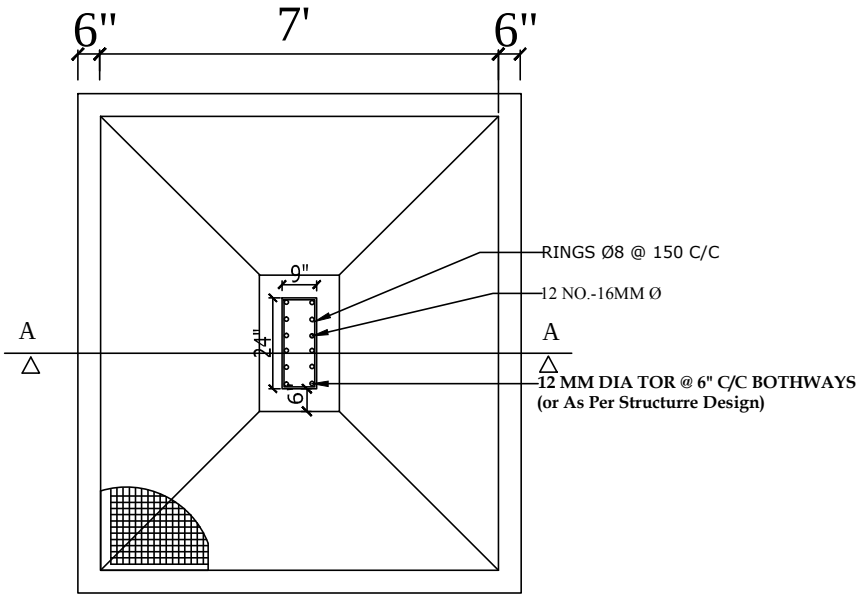

FOUNDATION PLAN