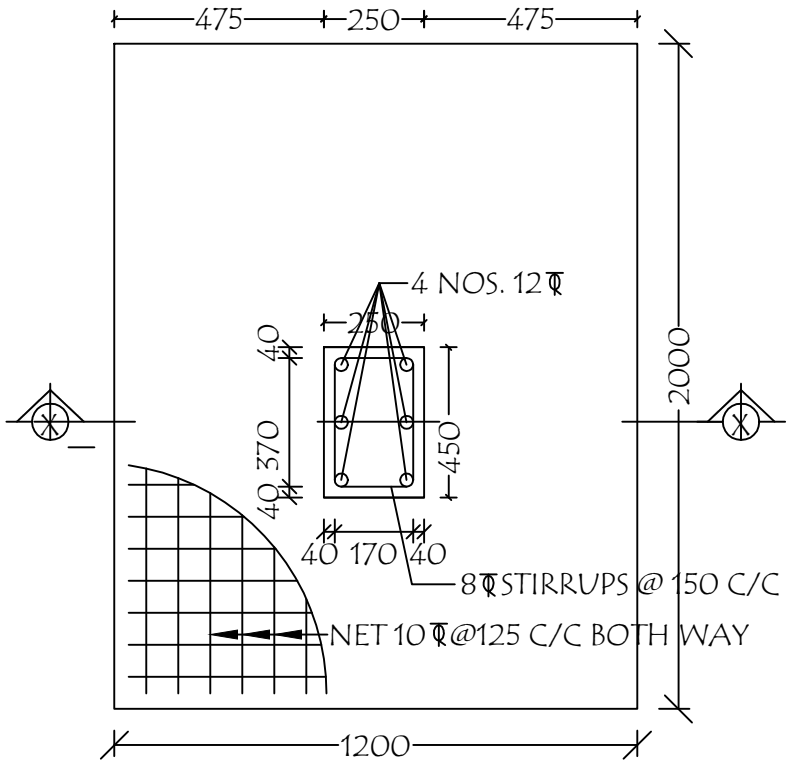

DETAILS OF COLUMN FOUNDATION

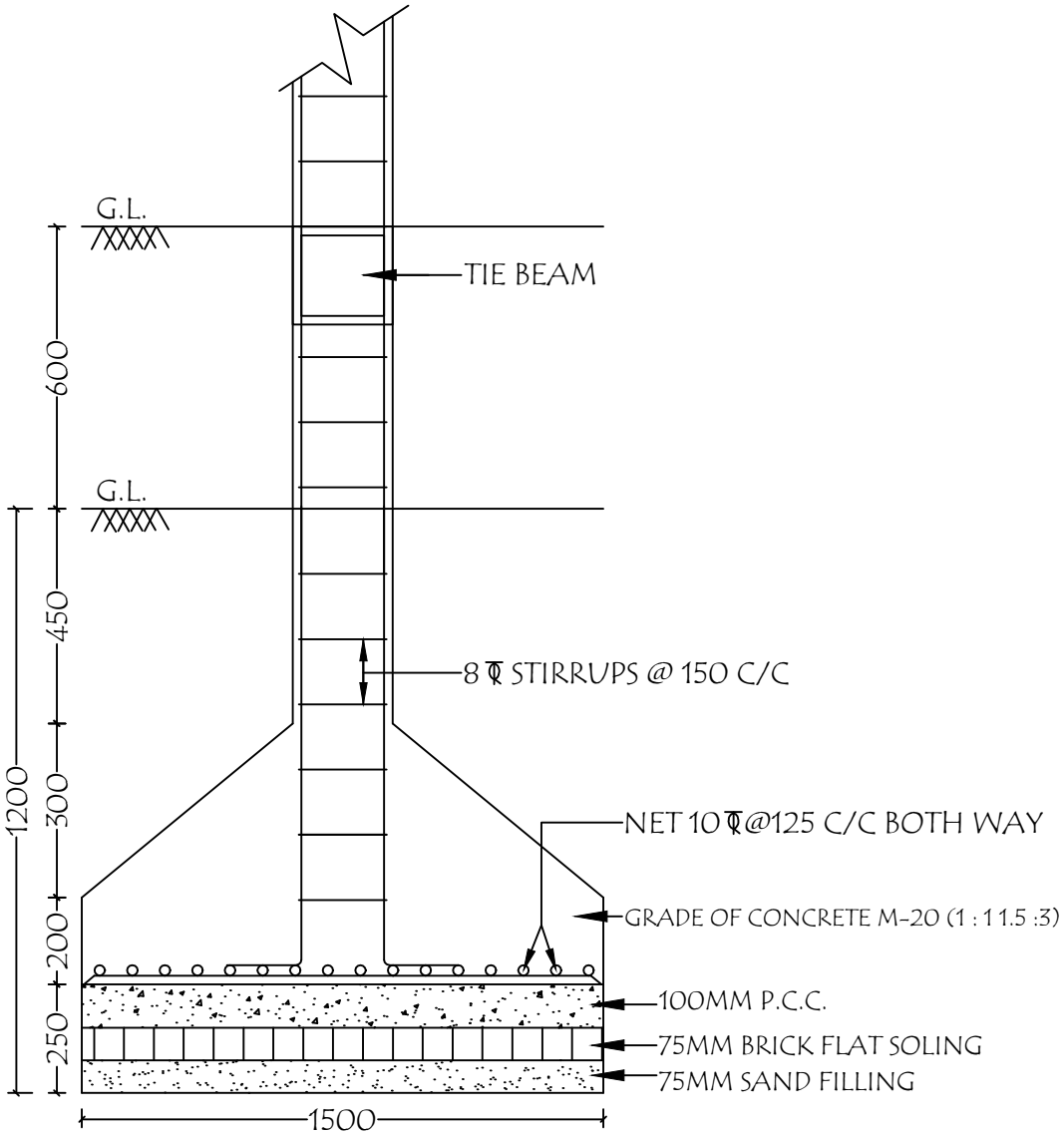

SECTION X X