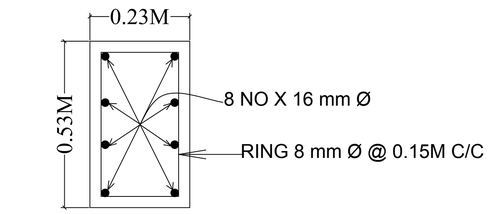

C.S. OF COLUMN .

SIZE - 0.23M X 0.53M

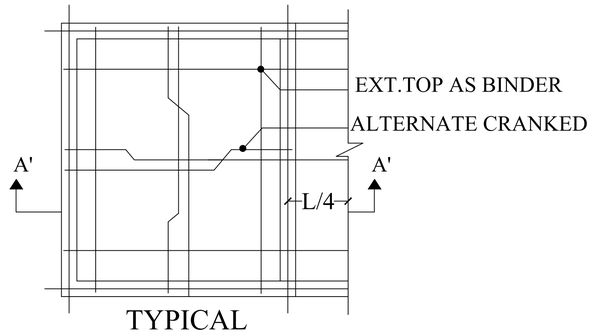

TYPICAL

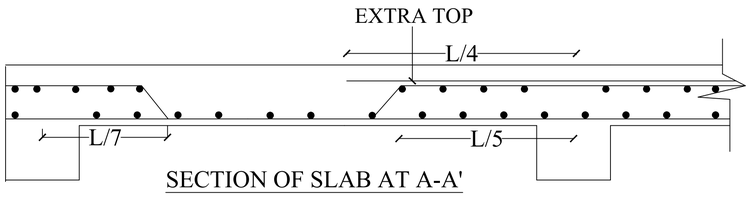

SECTION OF SLAB AT A-A'

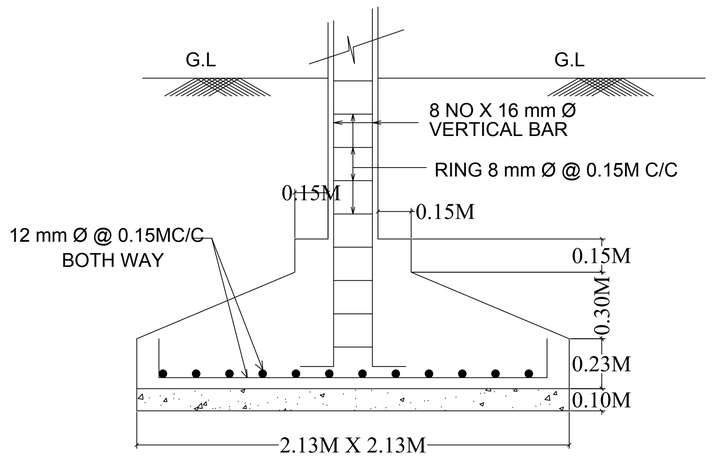

SECTION OF FOOTING .

SIZE - 2.13M X 2.13M

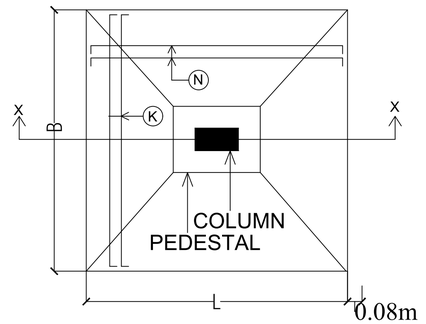

PLAN OF ISOLATED FOOTING

Structure Detail