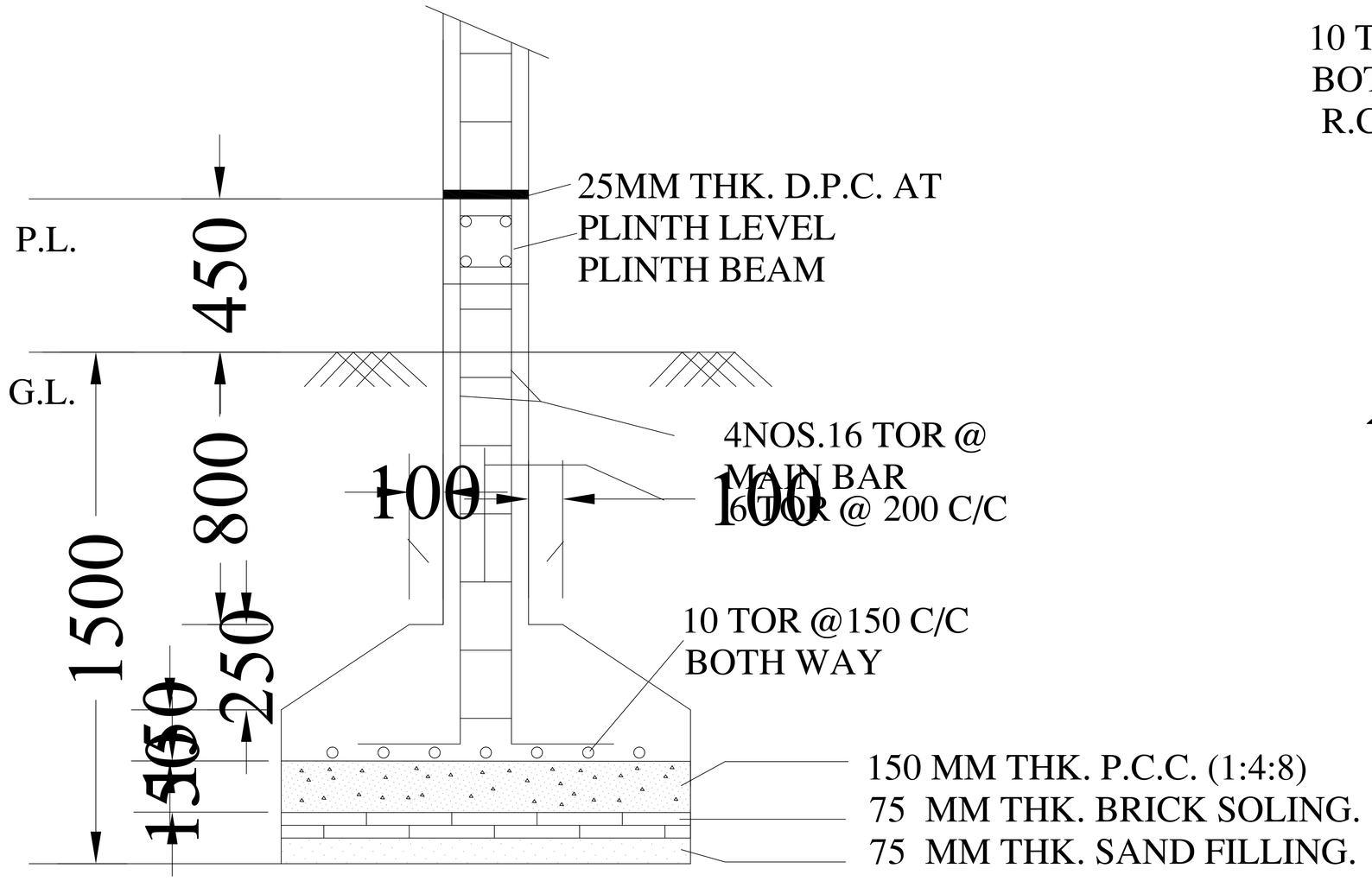

SECTION -CC

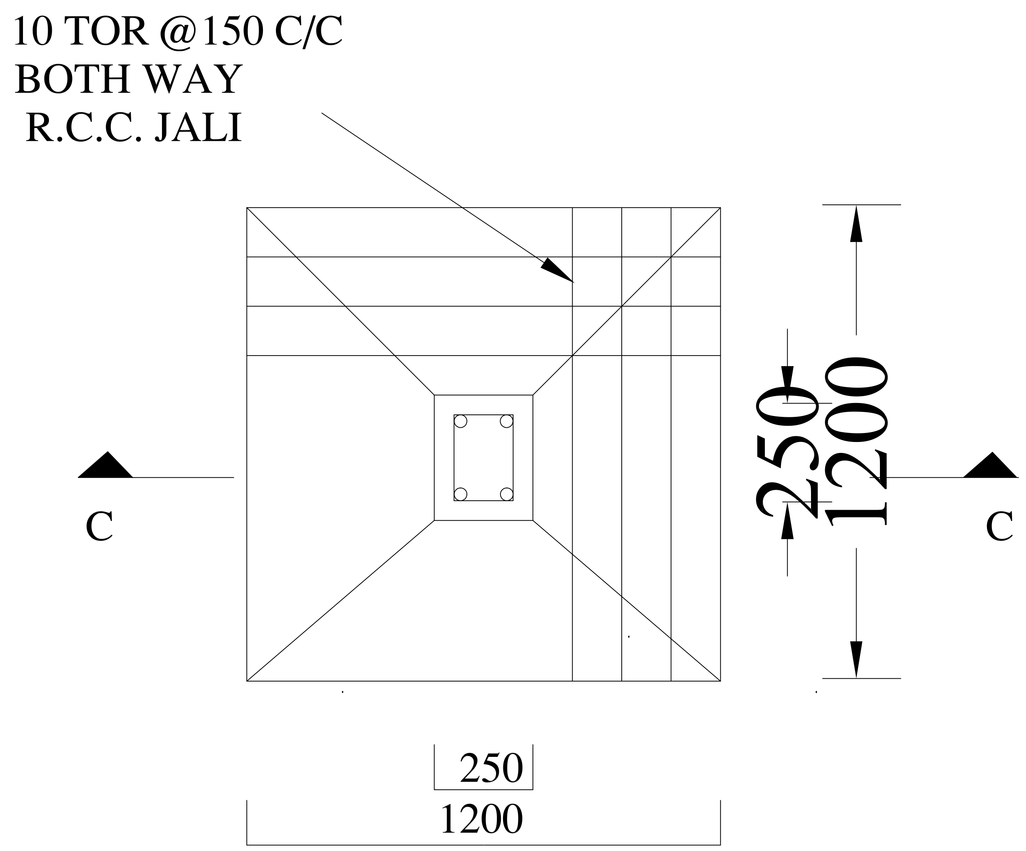

PLAN

DETAIL OF FOUNDATION

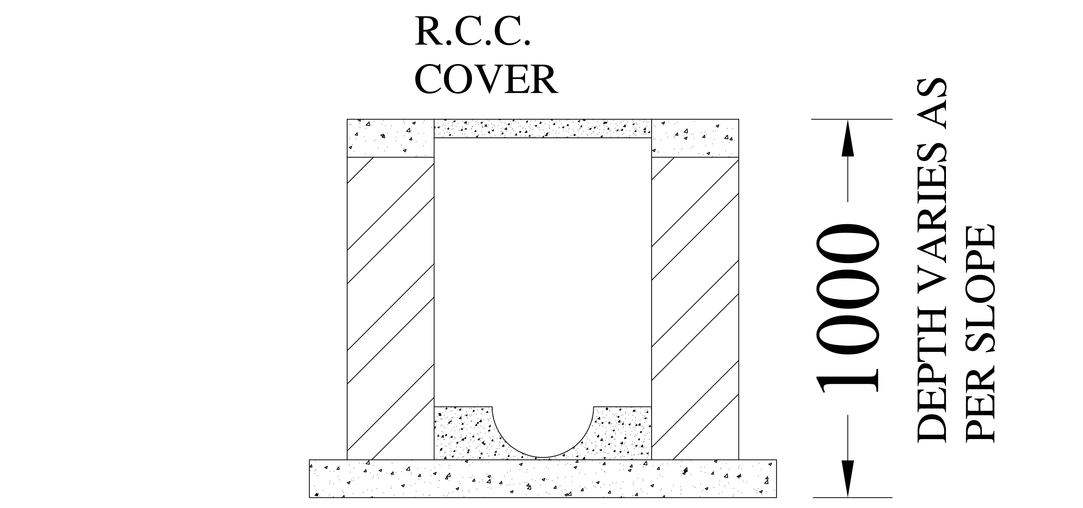

SECTION AT 2-2

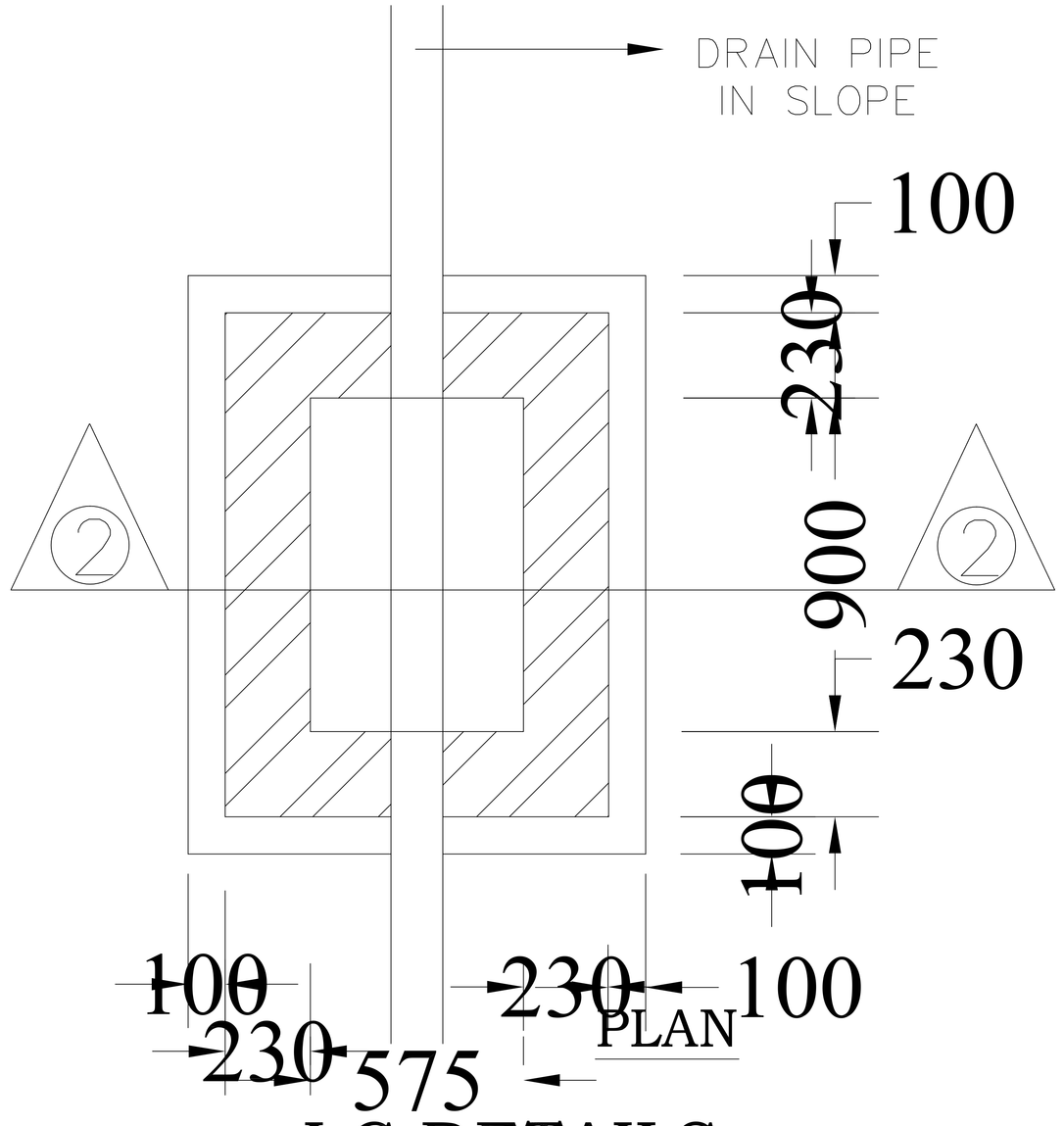

PLAN

I.C.DETAILS

STRUCTURE DETAIL