Project Title :SRI KULDIP SINGH AND OTHRES

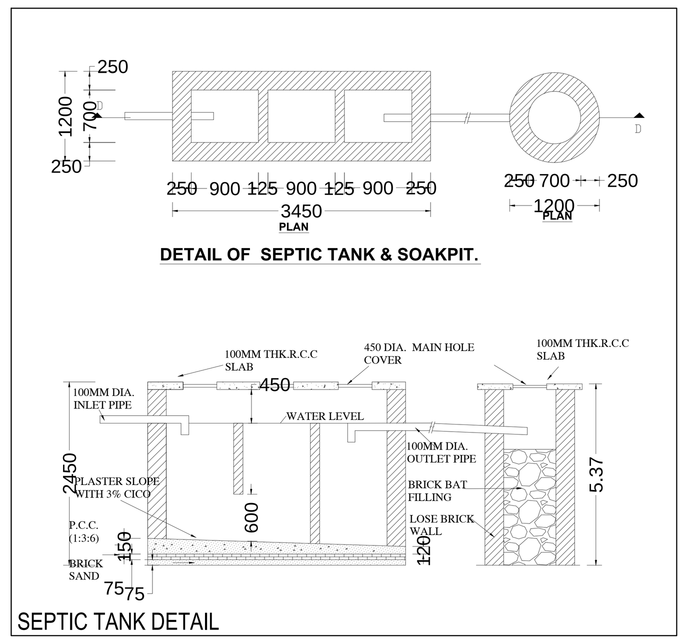

SEPTIC TANK DETAIL

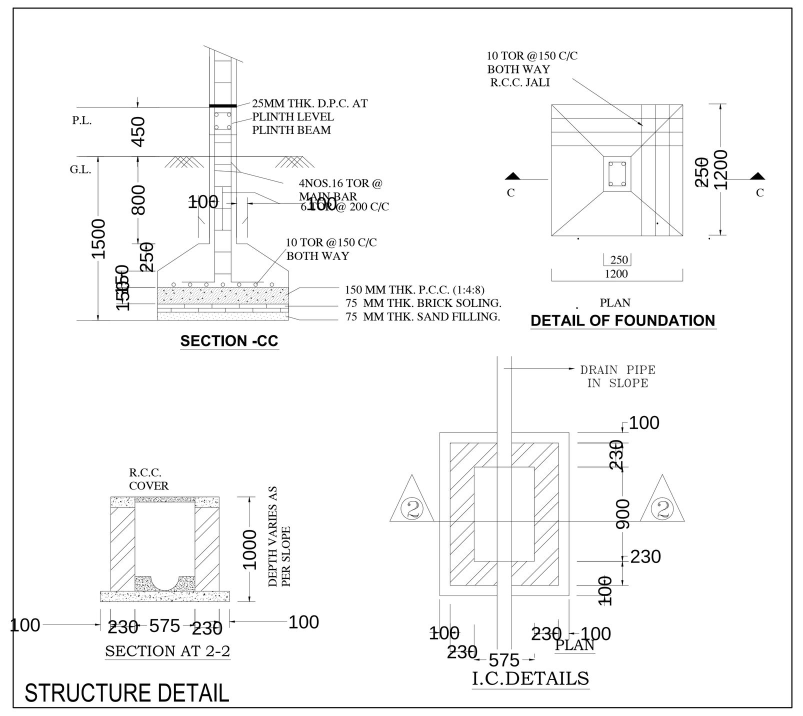

STRUCTURE DETAIL

SIDE ELEVATION

FRONT ELEVATION

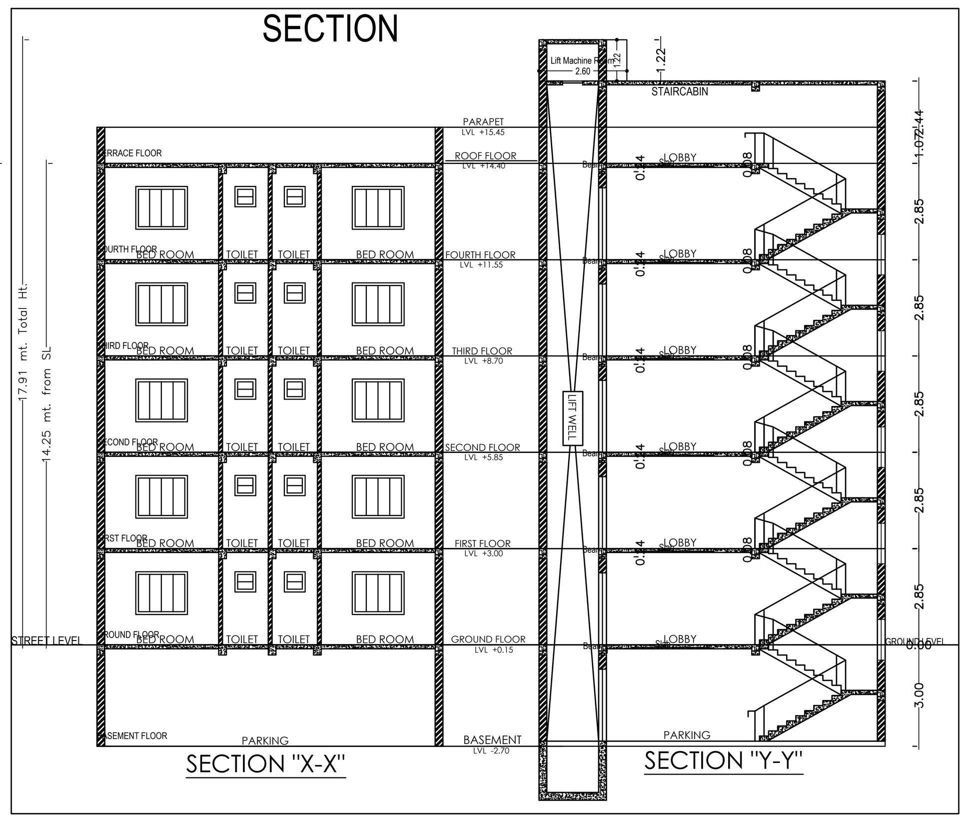

SECTION "X-X"

SECTION "Y-Y"

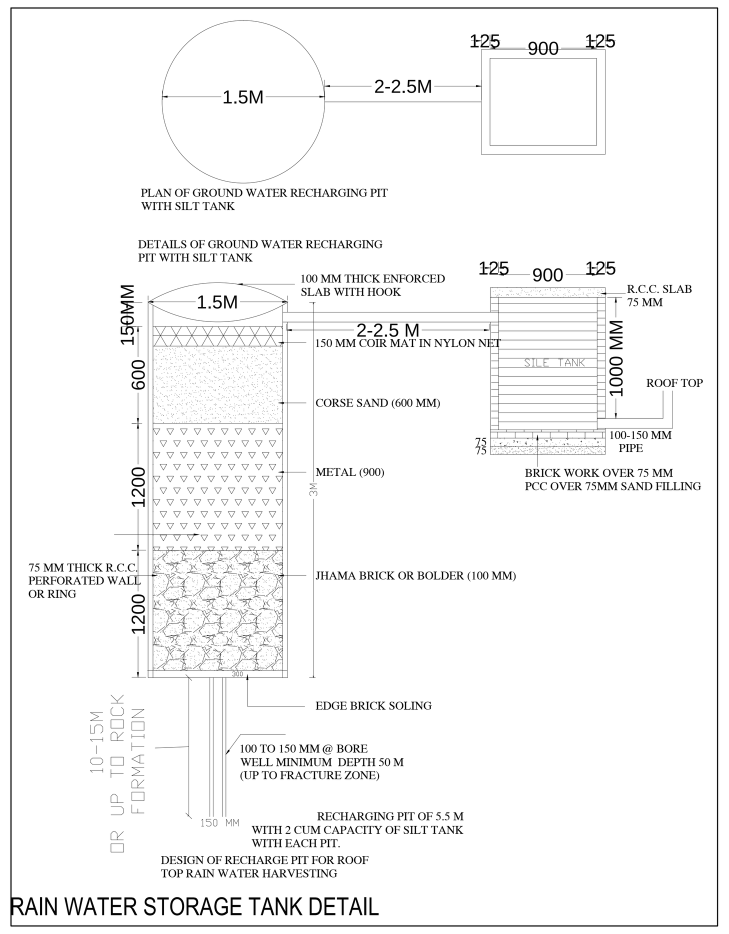

RAIN WATER STORAGE TANK DETAIL

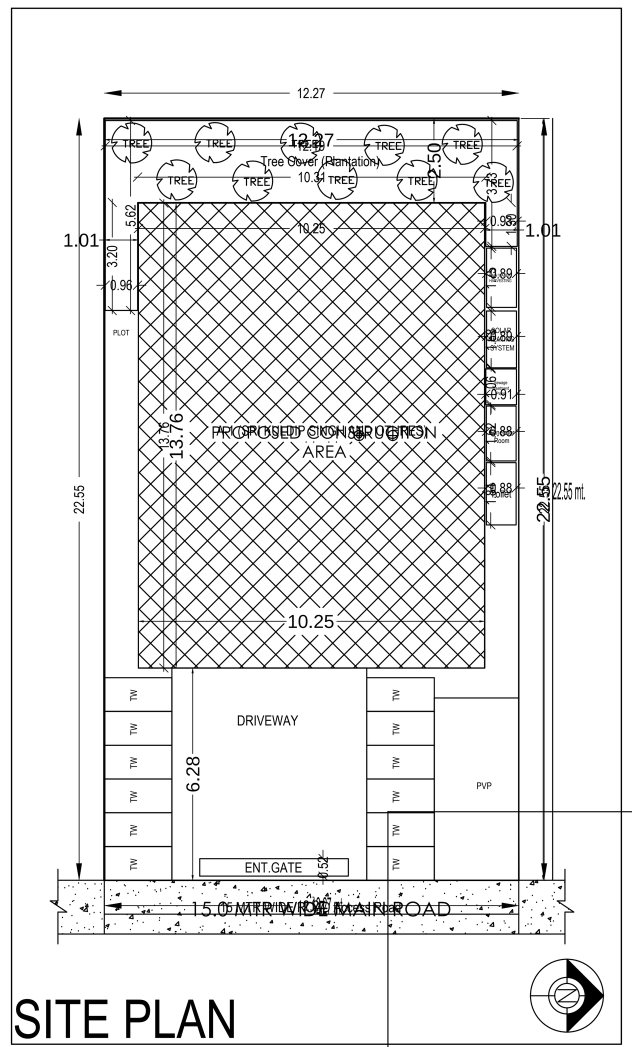

SITE PLAN

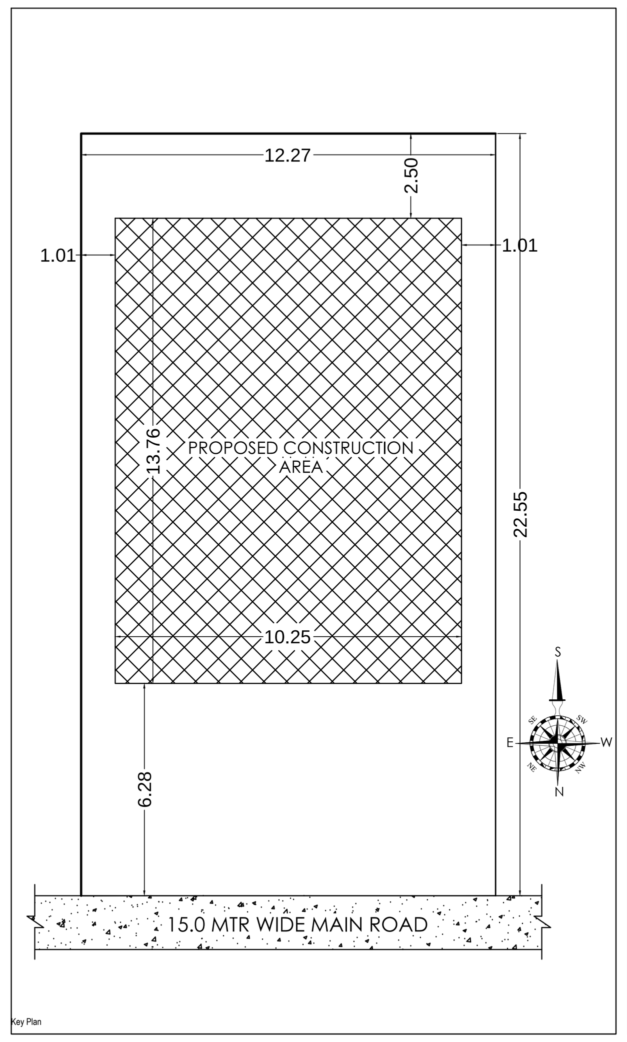

Key Plan

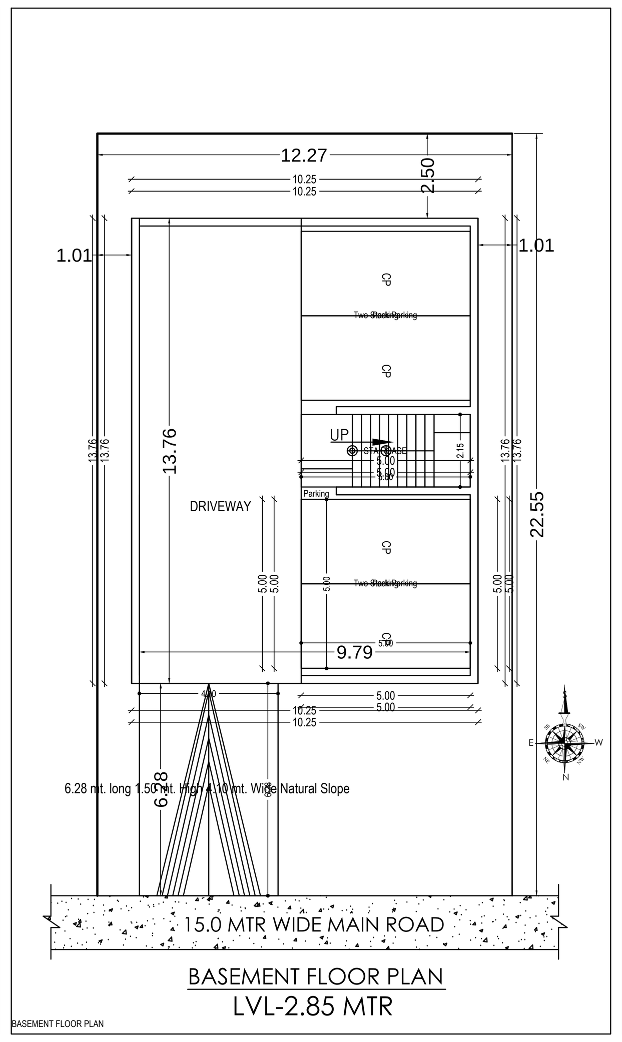

BASEMENT FLOOR PLAN
LVL-2.85 MTR

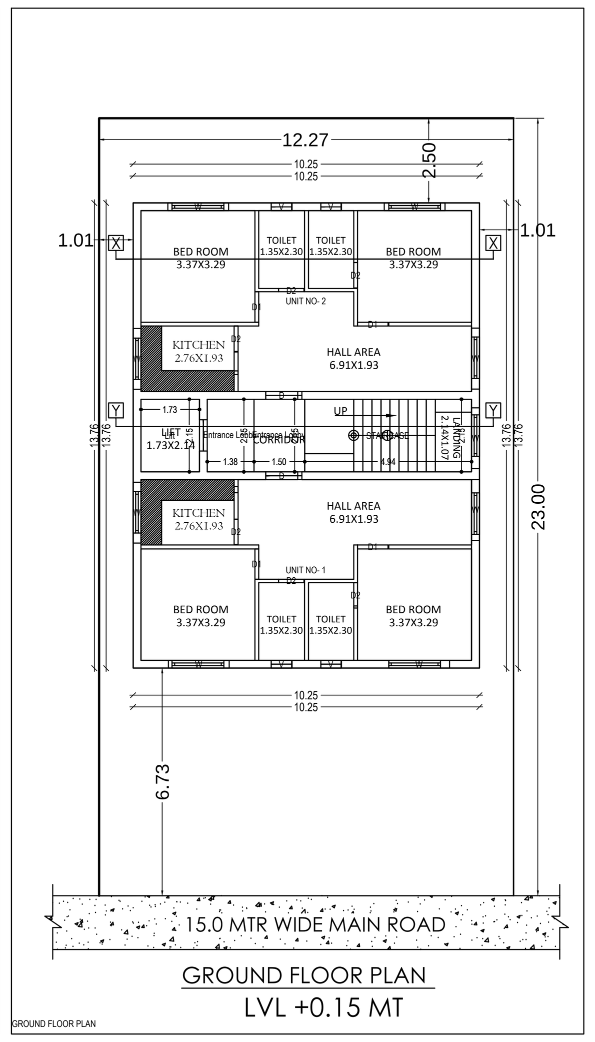

GROUND FLOOR PLAN
LVL +0.15 MT

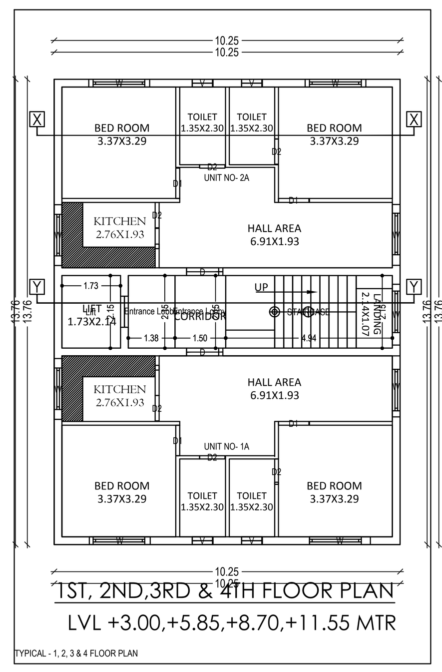

1ST, 2ND,3RD & 4TH FLOOR PLAN
LVL +3.00,+5.85,+8.70,+11.55 MTR
TYPICAL - 1, 2, 3 & 4 FLOOR PLAN

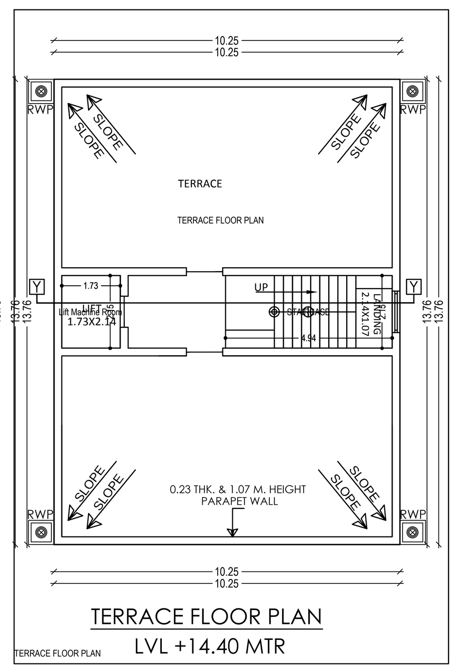

TERRACE FLOOR PLAN
LVL +14.40 MTR

A (SRI KULDIP SINGH AND OTHRES)

PROPOSED RESIDENTIAL BUILDING FOR	
LAND OWNER	SIGNATURE
SRI KULDIP SINGH	
SRI SUKHDEV SINGH	
SRI JAGDEV SINGH	
SRI BALDEV SINGH	
SRI RANJIT SINGH	
SRI JASPAL SINGH	
SRI SUNIL RAJ SINGH	

DETAILS OF PLOT :-
PLOT NO :- 2863
KATHA NO :- 245
MOUZA :- SAKCHI
WARD NO :- 9
HOLDING NO :- NIL , KASIDIH SHOP AREA
THANA NO:- 1641, P.S :- SAKCHI
DISTRICT :- EAST SINGHBHUM , JHARKHAND

CONTENTS :-
* SECTION AT X-X
* SECTION AT Y-Y
* TERRACE FLOOR PLAN
* FRONT ELEVATION
* SIDE ELEVATION
* SITE PLAN
* BASEMENT FLOOR PLAN
* GROUND FLOOR PLAN
* TYPICAL FLOOR PLAN
* 1ST, 2ND,3RD & 4TH FLOOR PLAN

SH. NO 1/1

AREA STATEMENT: JAMSHEDPUR NAC	VERSION NO.: 1.0.24
	VERSION DATE: 01/01/2019
PROJECT DETAIL :	
Inward_No. : -	Plot Use : Residential
Region : JHARKHAND URBAN LOCAL BODIES	Plot SubUse : Residential Bldg/Apartment
District : EAST SINGHBHUM	Land Use Zone : NA
Application Type : General Proposal	Abutting Road Width : -
Project Type : Building Permission	Plot No. : -
Nature of Development : New	Revenue Survey No/Survey No : -
Location : Old Area	Thana No : -
Sub Location : NA	Holding No : -
Village/Mauza Name : -	Khata No : -
Ward No : -	North : -
Road/Street : -	South : -
	East : -
	West : -

AREA DETAILS :		SQ.MT.
AREA OF PLOT (Minimum)	(A)	276.61
Net Plot Area (Gross Plot Area - Deduction from Gross Plot area)	(A-Deductions)	276.61
Deductions for Balance Plot Area (from Gross Plot Area)		
COP Area		33.84
Total		33.84
Balance Plot Area (Net Plot Area - Recreational/Amenity space)	(A-Deductions)	242.78
Plot Area for Coverage (Net Plot Area)	(A-Deductions)	276.61
Plot Area for FSI (Net Plot Area + RoadWidening Area)	(A-Deductions)	276.61
AccessoryUse Area		4.01
COVERAGE CHECK		
Proposed Coverage Area (50.98 %)		141.03
Total Coverage Area (50.98 %)		141.03
FAR CHECK		
Proposed Area of FAR		666.28
Total Area of FAR		666.28
BUILT UP AREA CHECK		
Total Proposed BuiltUp Area		842.46
ARCH / ENGG / SUPERVISOR (Regd)	OWNER	
DEVELOPMENT AUTHORITY	LOCAL BODY	

COLOR INDEX
PLOT BOUNDARY
ABUTTING ROAD
PROPOSED WORK (COVERAGE AREA)
EXISTING (To be retained)
EXISTING (To be demolished)

Color Index:
PARKING CALCULATION:

Parking Type	Prop No.	Prop Area
Car Parking	4	50.00
Visitors Car Parking	1	13.50
Two Stack Car Parking	2	25.00
Two Wheeler Parking	12	24.00
Other Parking	2	105.29
Total Area	21	217.79

MARGIN DETAIL:

Building / Wing Name	Road Name	Front Margin	Rear Margin	Side1 Margin	Side2 Margin
A-1 (SRI KULDIP SINGH AND OTHRES)	15 MTR WIDE ROAD Access Road	6.28	2.50	1.01	1.01

BASEMENT MARGIN DETAIL:

Building / Wing Name	Road Name	Front Margin	Rear Margin	Side1 Margin	Side2 Margin
A-1 (SRI KULDIP SINGH AND OTHRES)	15 MTR WIDE ROAD Access Road	6.28	2.50	1.01	1.01

FAR & Tenement Details (Table 4c-1)

Building	No. of Same Bldg	Total Built Up Area (Sq.mt.)	Deductions (Area in Sq.mt.)			Proposed FAR Area (Sq.mt.)	Add Area In FAR (Sq.mt.)	Total FAR Area (Sq.mt.)	Tnmt (No.)
			Lift	Accessory Use	Parking	Resi.	Stair		
A (SRI KULDIP SINGH AND OTHRES)	1	842.46	14.88	31.00	155.29	655.55	10.73	666.28	10
Grand Total :	1	842.46	14.88	31.00	155.29	655.55	10.73	666.28	10

Building :A (SRI KULDIP SINGH AND OTHRES)

Floor Name	Total Built Up Area (Sq.mt.)	Deductions (Area in Sq.mt.)			Proposed FAR Area (Sq.mt.)	Add Area In FAR (Sq.mt.)	Total FAR Area (Sq.mt.)	Tnmt (No.)
		Lift	Accessory Use	Parking	Resi.	Stair		
Basement Floor...	141.03	0.00	0.00	155.29	0.00	10.73	10.73	00
Ground Floor...	137.31	0.00	6.20	0.00	131.11	0.00	131.11	02
First Floor...	141.03	3.72	6.20	0.00	131.11	0.00	131.11	02
Second Floor...	141.03	3.72	6.20	0.00	131.11	0.00	131.11	02
Third Floor...	141.03	3.72	6.20	0.00	131.11	0.00	131.11	02
Fourth Floor...	141.03	3.72	6.20	0.00	131.11	0.00	131.11	02
Terrace Floor...	0.00	0.00	0.00	0.00	0.00	0.00	0.00	00
Total :	842.46	14.88	31.00	155.29	655.55	10.73	666.28	10
Total Number of Same Buildings :	1							
Total :	842.46	14.88	31.00	155.29	655.55	10.73	666.28	10

SCHEDULE OF JOINERY:

BUILDING NAME	NAME	LENGTH	HEIGHT	NOS
A (SRI KULDIP SINGH AND OTHRES)	D2	0.75	2.13	30
A (SRI KULDIP SINGH AND OTHRES)	D1	0.90	2.13	20
A (SRI KULDIP SINGH AND OTHRES)	D	0.95	2.13	10
Total	-	-	-	60

SCHEDULE OF JOINERY:

BUILDING NAME	NAME	LENGTH	HEIGHT	NOS
A (SRI KULDIP SINGH AND OTHRES)	V	0.60	1.00	20
A (SRI KULDIP SINGH AND OTHRES)	W	1.80	2.70	45
Total	-	-	-	65

UnitBUA Table for Building :A (SRI KULDIP SINGH AND OTHRES)

FLOOR	Name	UnitBUA Type	UnitBUA Area	Carpet Area	No. of Rooms	No. of Tenement
GROUND FLOOR PLAN	UNIT NO- 1	FLAT	52.34	52.32	6	2
	UNIT NO- 2	FLAT	52.34	52.33	6	
TYPICAL - 1, 2, 3 & 4 FLOOR PLAN	UNIT NO- 1A	FLAT	52.34	52.32	6	8
	UNIT NO- 2A	FLAT	52.34	52.32	6	
Total	-	-	523.40	523.25	60	10