PRODUCED BY AN AUTODESK EDUCATIONAL PRODUCT

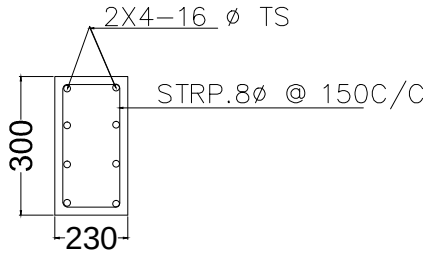

C/S OF COL.

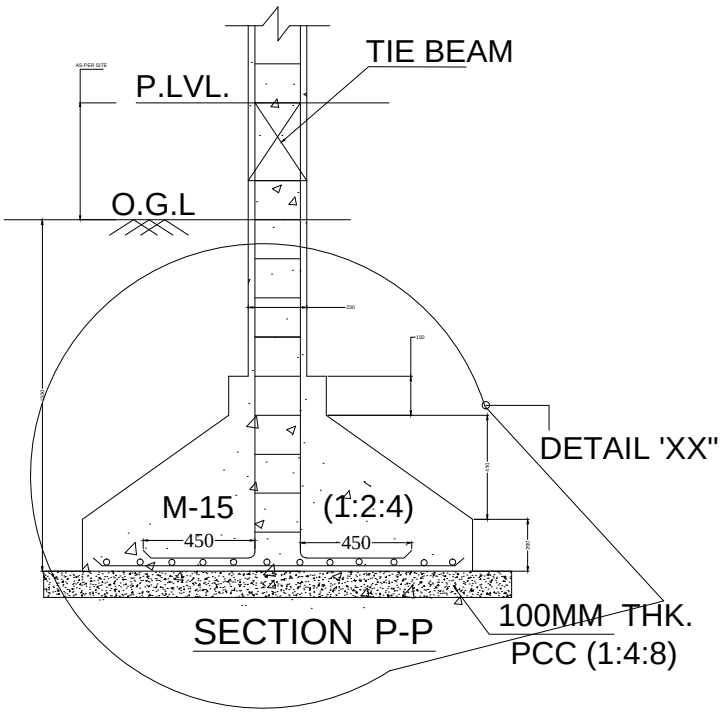

SECTION P-P

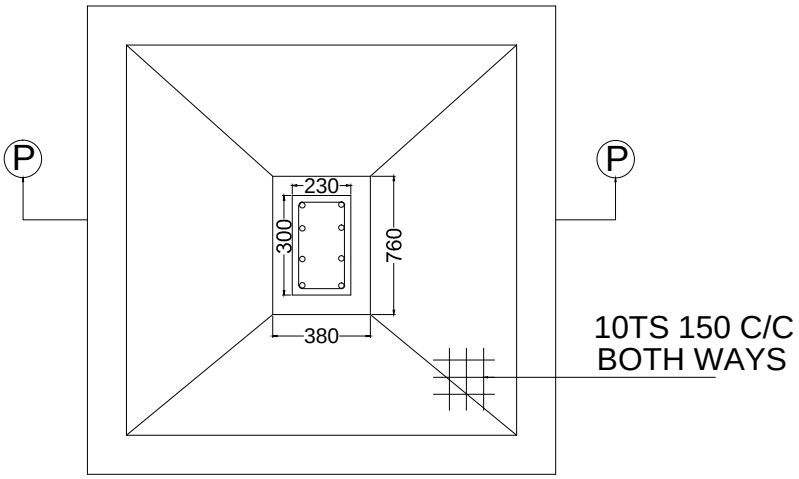

PLAN

FOOTING PLAN (AS/STRL. DESIGN)

SCALE N.T.S

Structure Detail

PRODUCED BY AN AUTODESK EDUCATIONAL PRODUCT

PRODUCED BY AN AUTODESK EDUCATIONAL PRODUCT

PRODUCED BY AN AUTODESK EDUCATIONAL PRODUCT