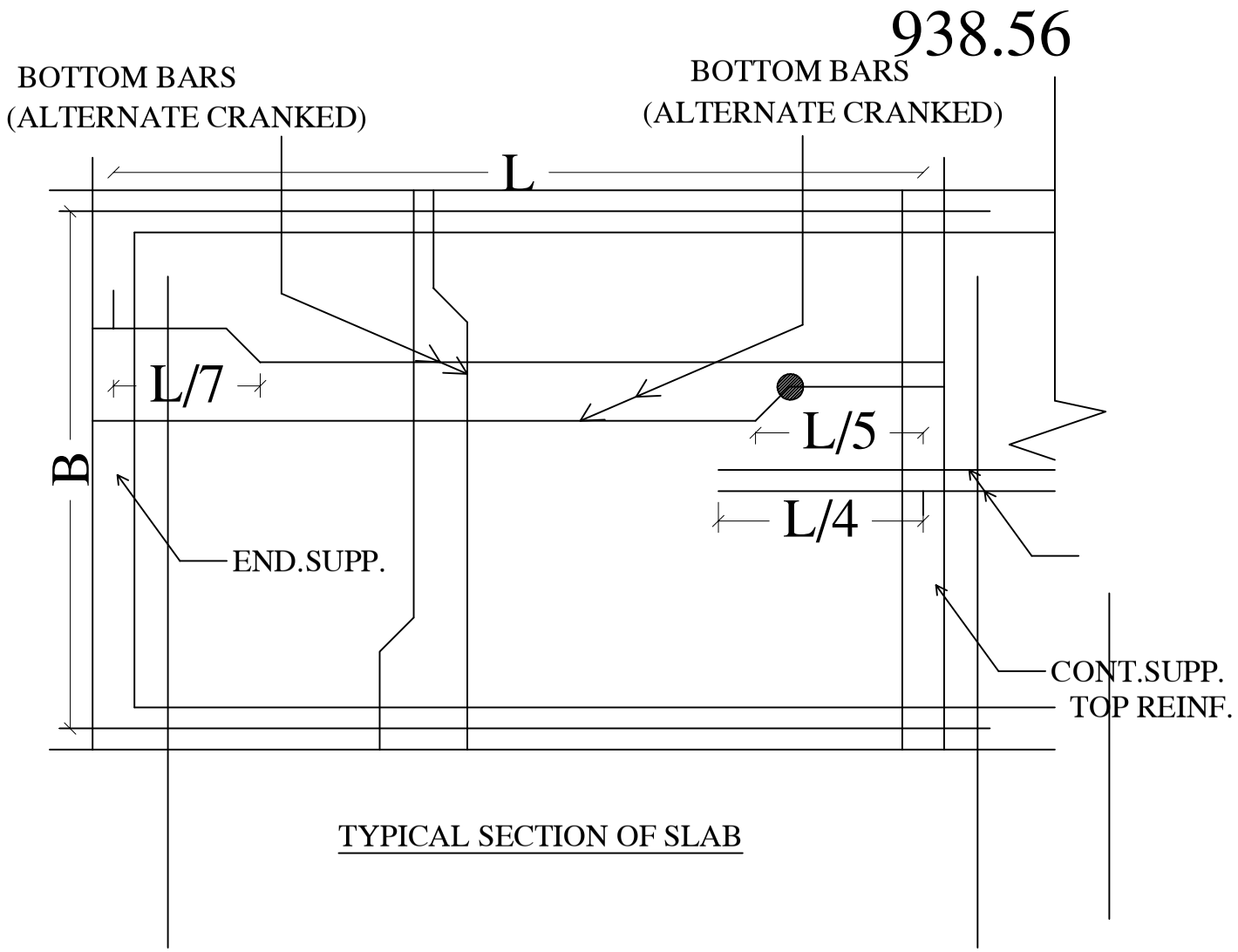

TYPICAL SECTION OF SLAB

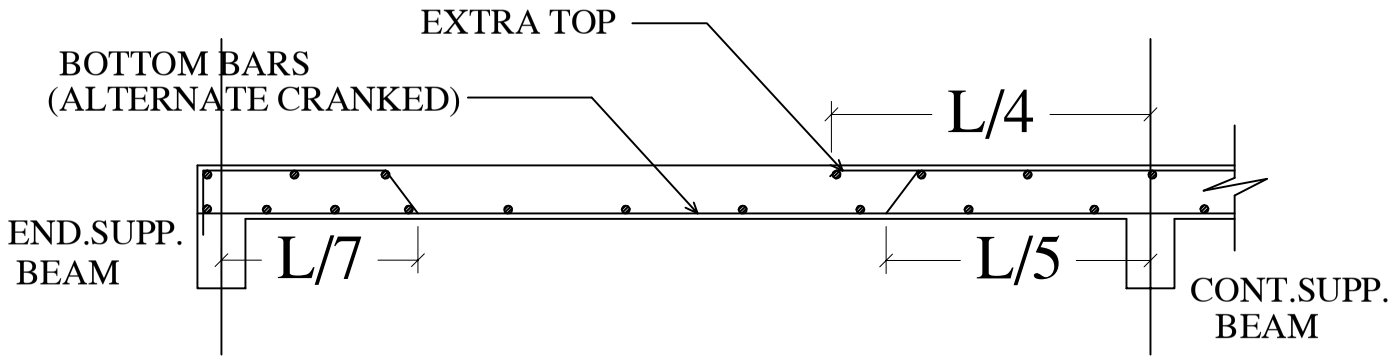

CROSS SECTION OF R.C.C SLAB

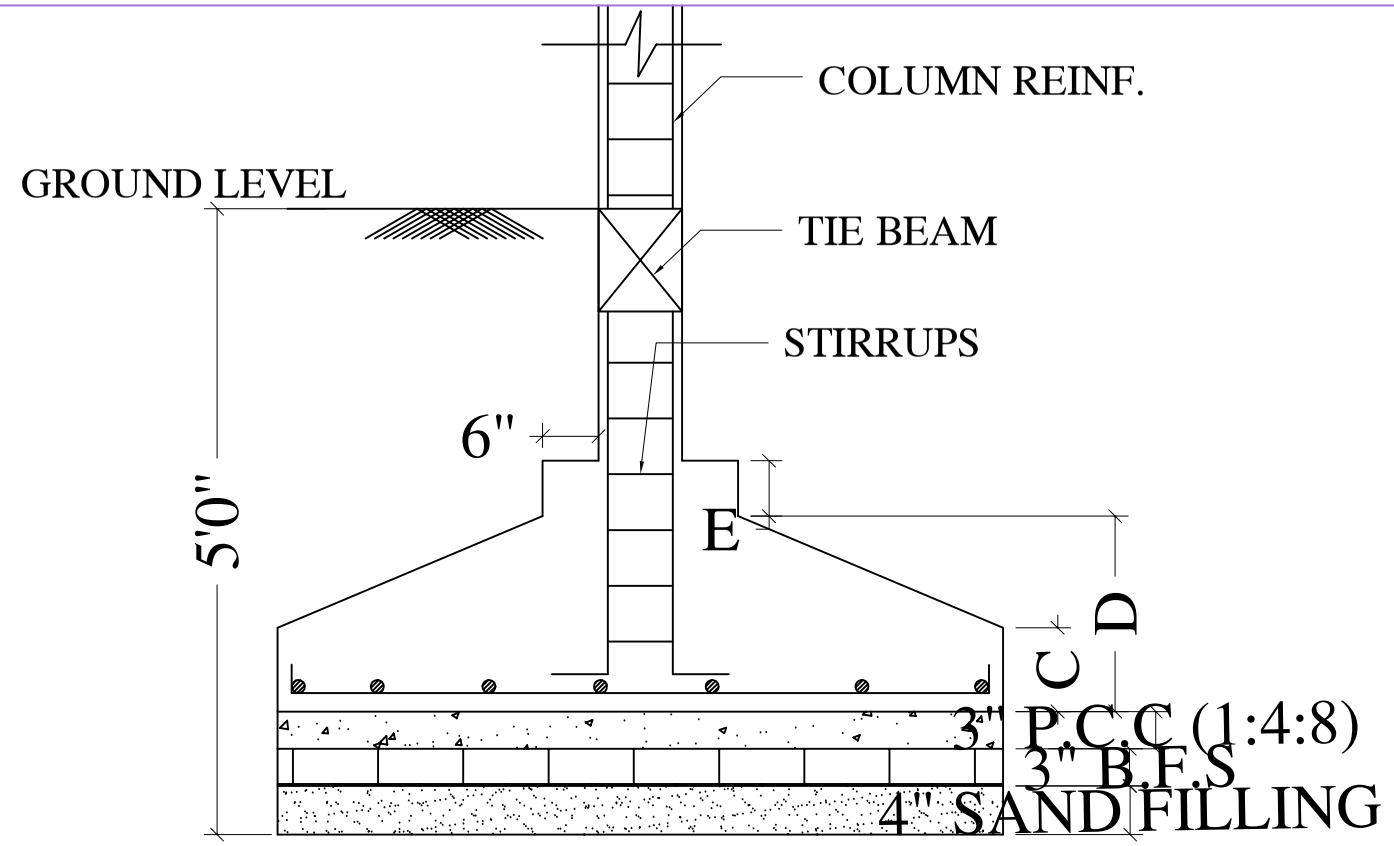

TYPICAL SECTION OF FOOTING

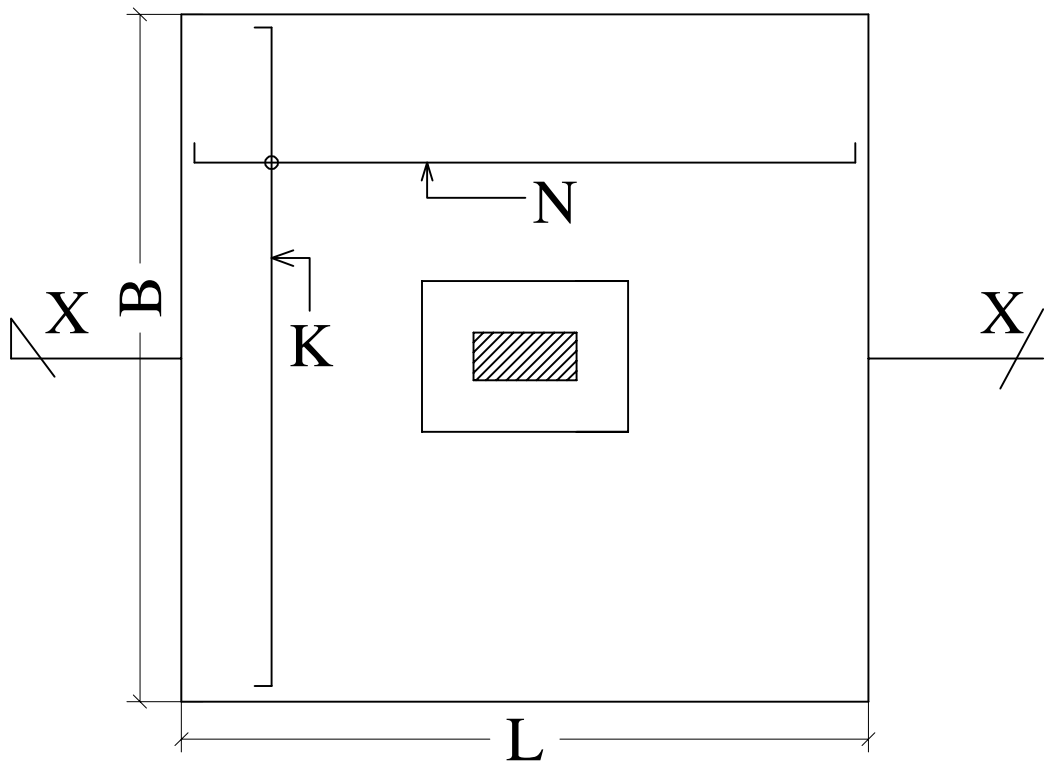

PLAN OF FOOTING

Structure Detail