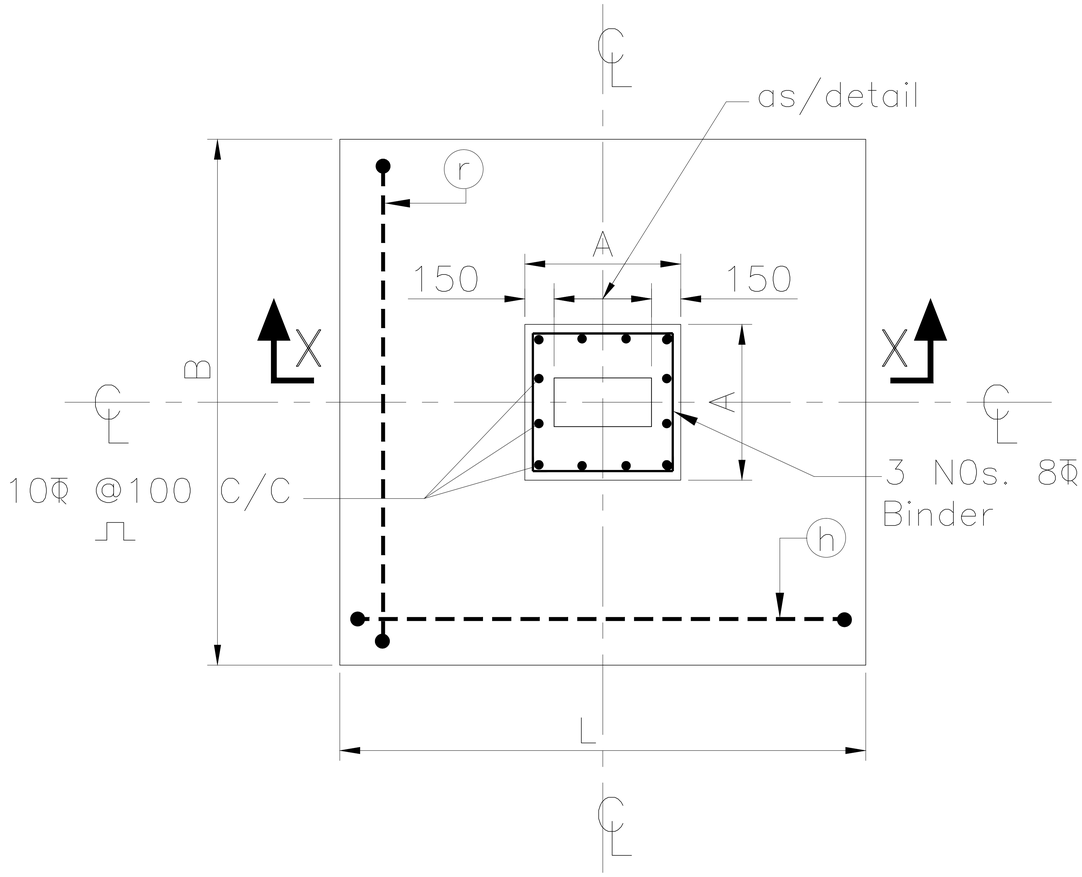

TYP DETAIL OF ISOLATED FOOTING

Typical arrangement for
Lateral Ties & Lapping

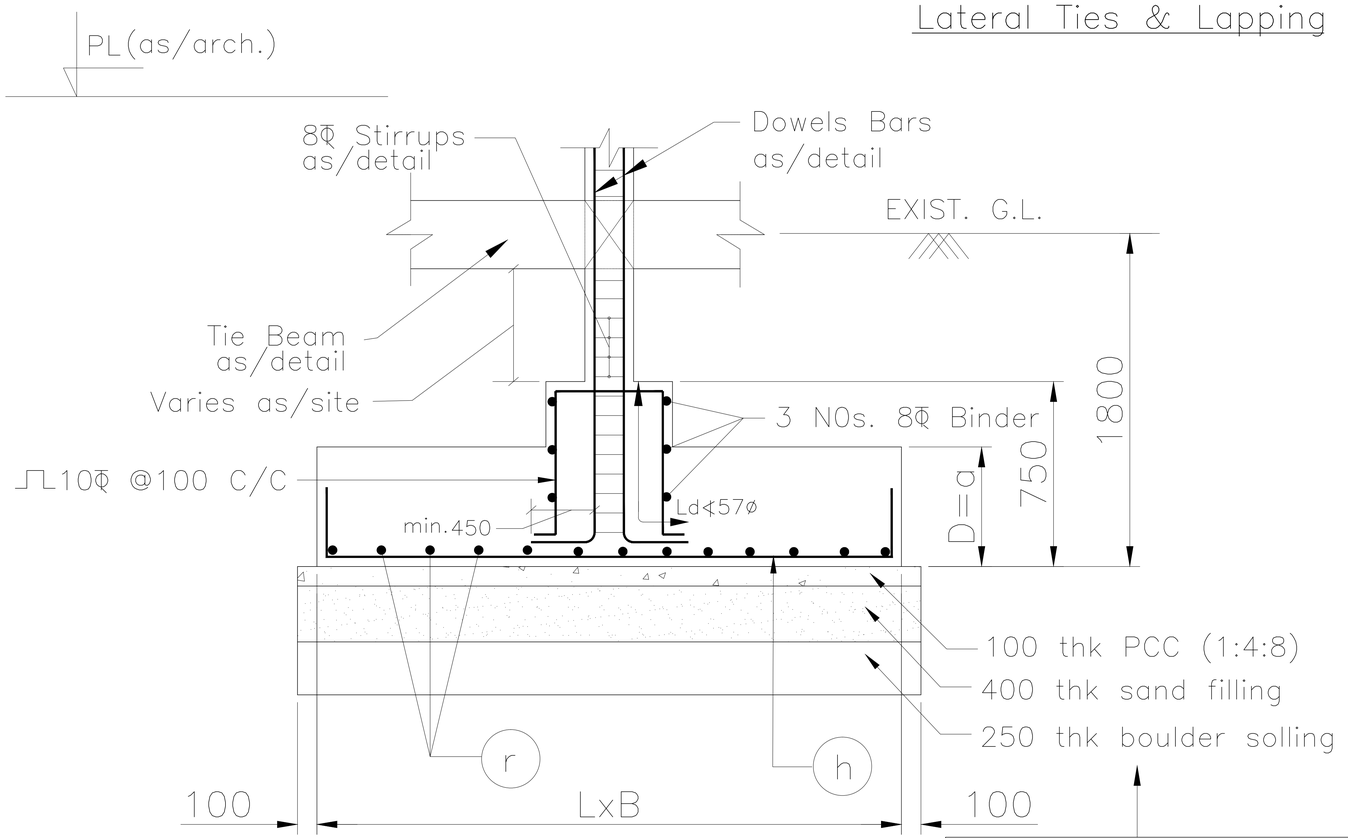

SECTION X–X

NOTES:–
SUBJECT TO VERIFICATION
AS PER SITE CONDITION