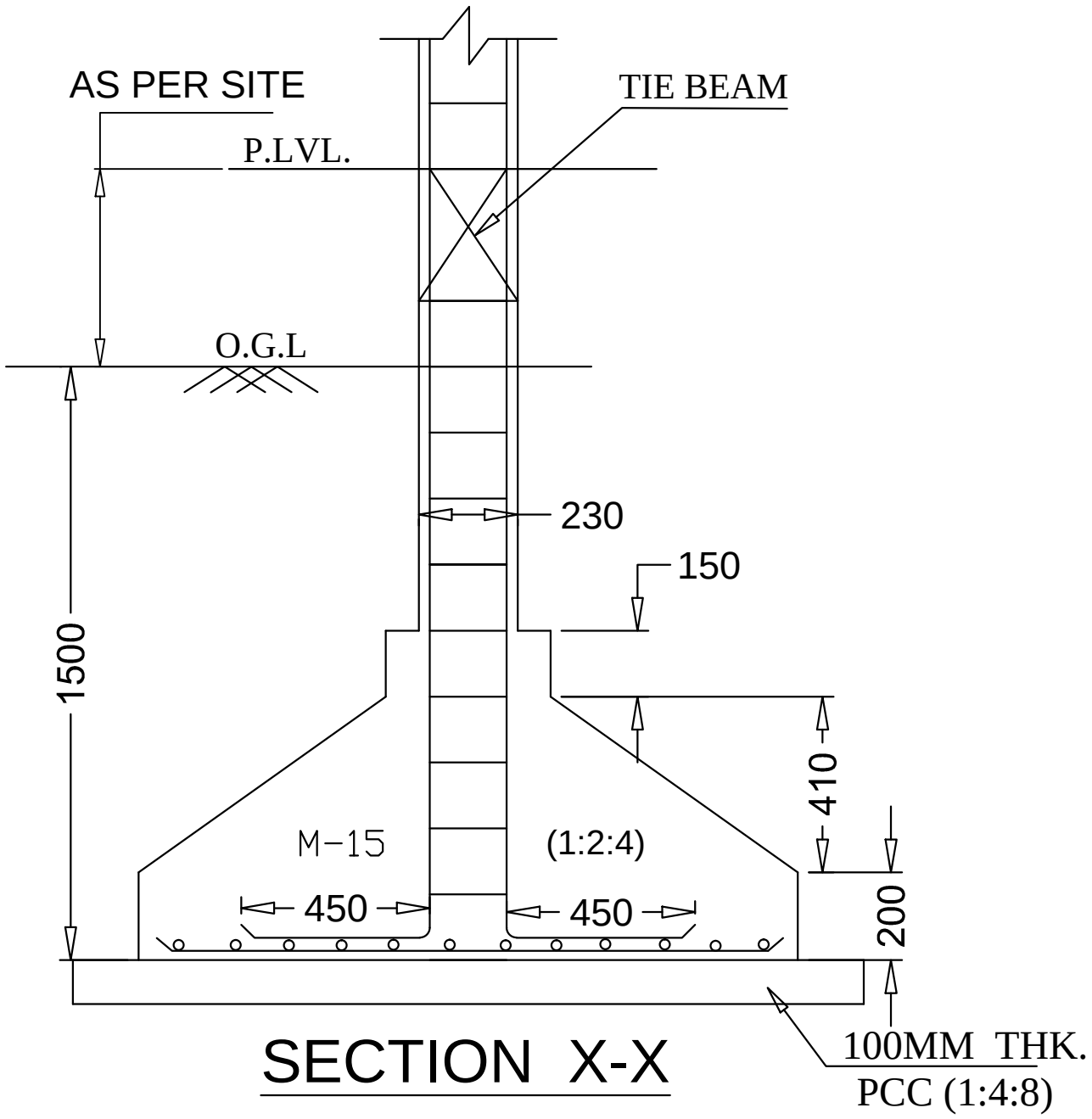

SECTION X-X

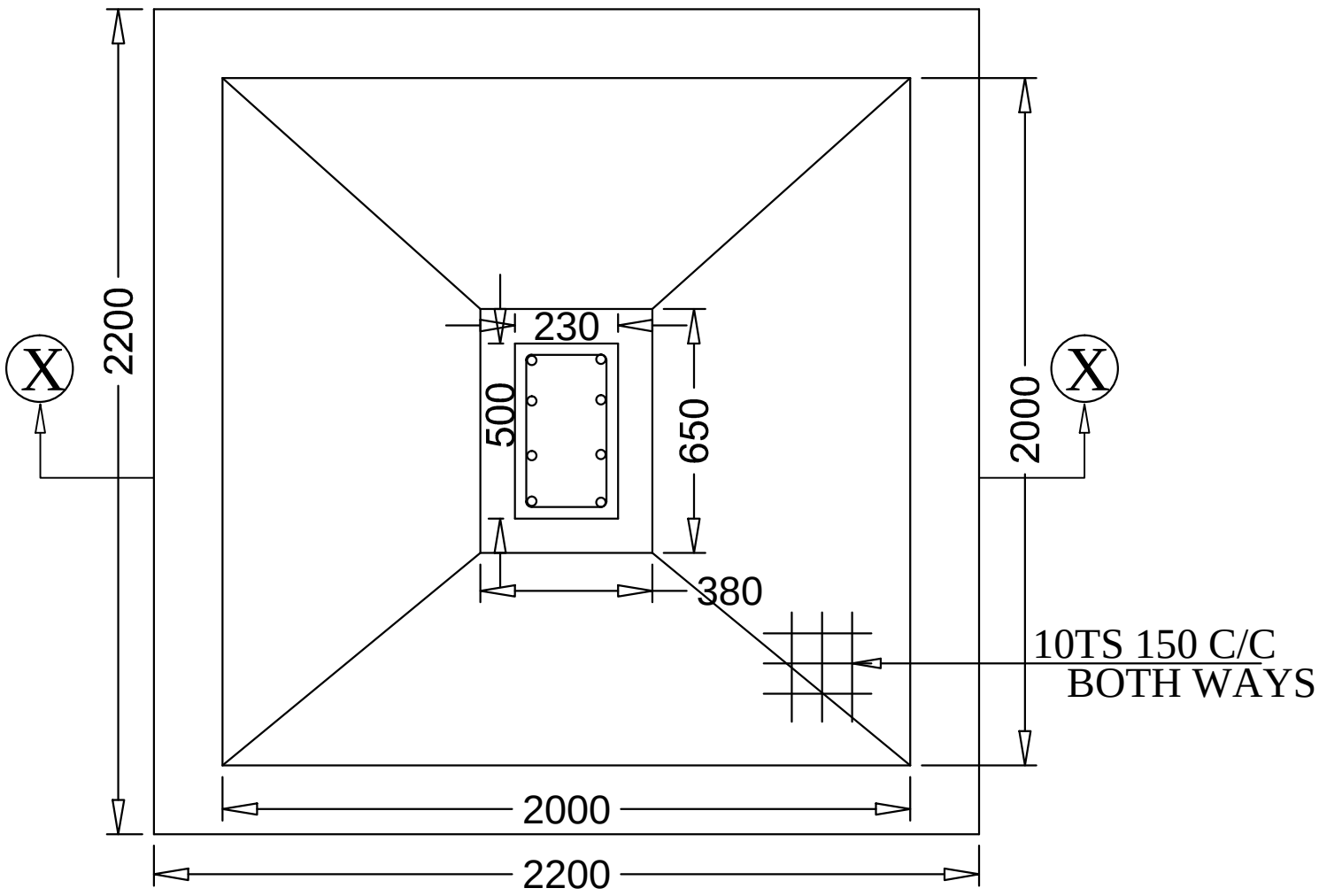

PLAN OF COLUMN FOOTING

Structure Detail