Project Title :mrs.vibha singh

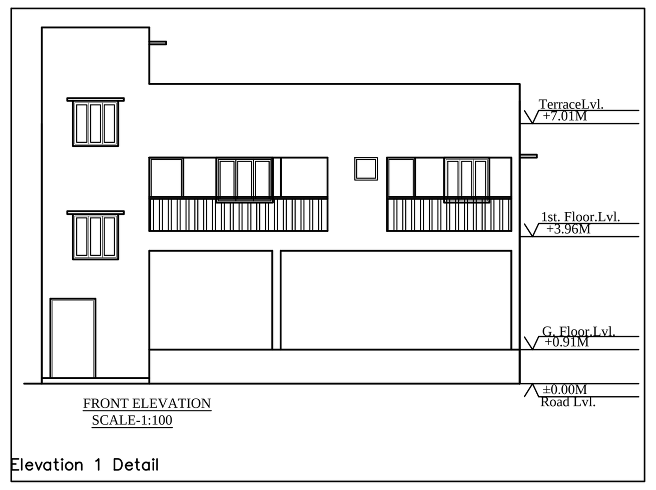

Elevation 1 Detail

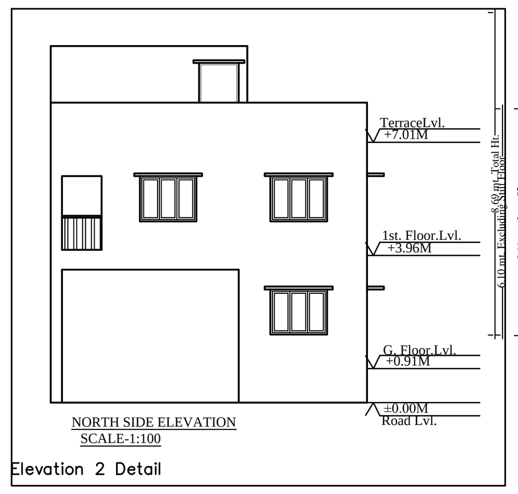

Elevation 2 Detail

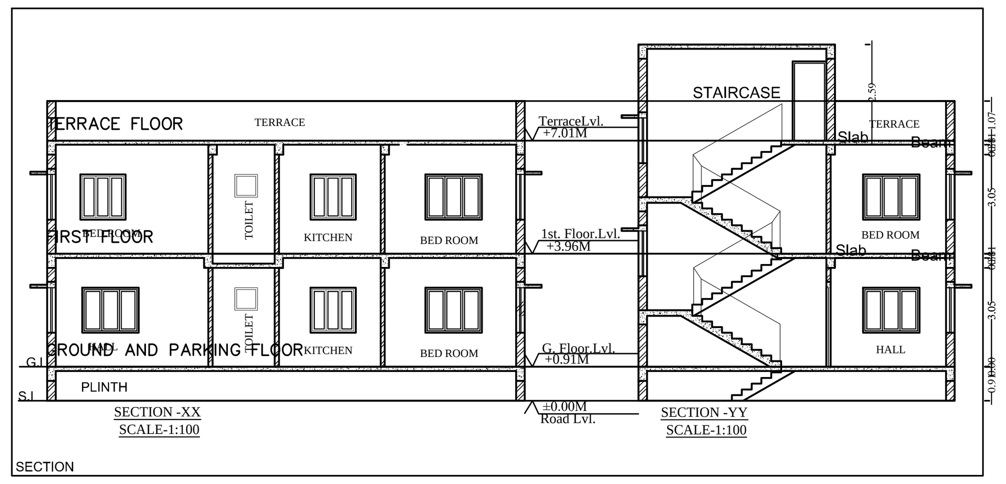

SECTION

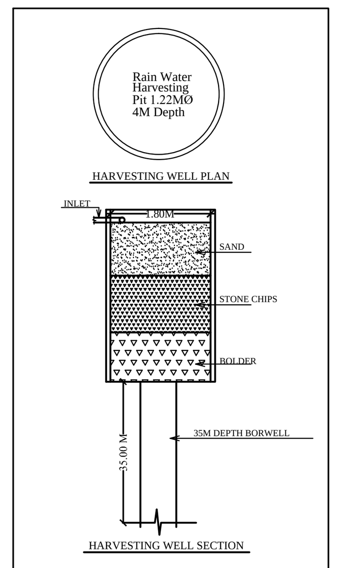

Rain Water Storage Tank Detail

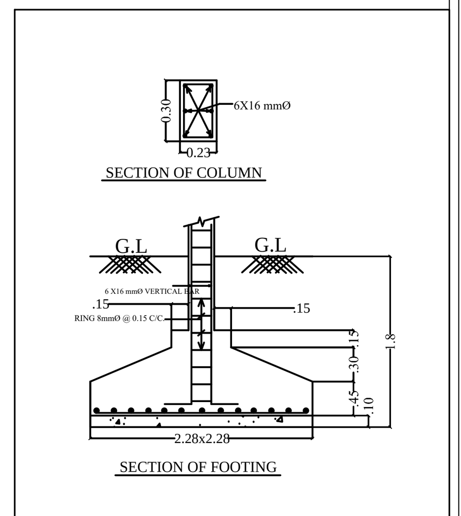

Structure Detail

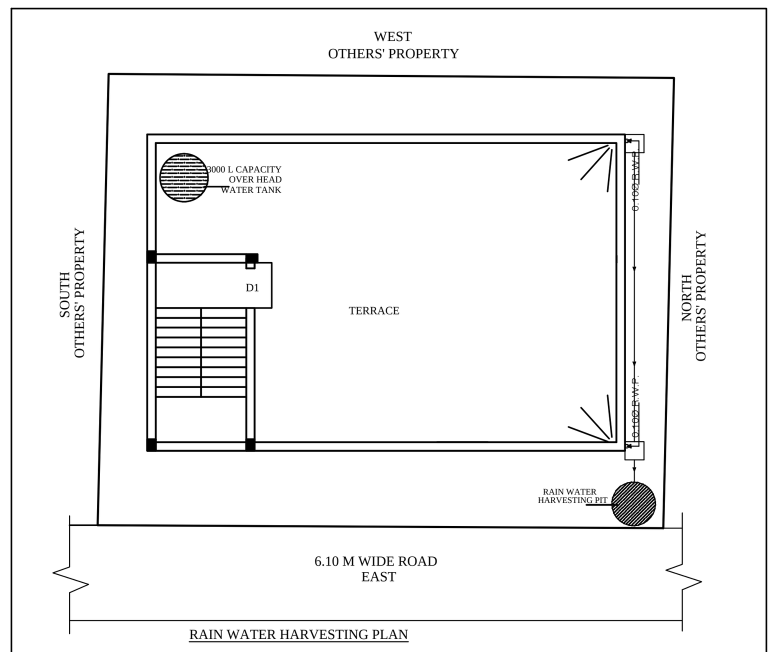

Rain Water Storage Tank Detail

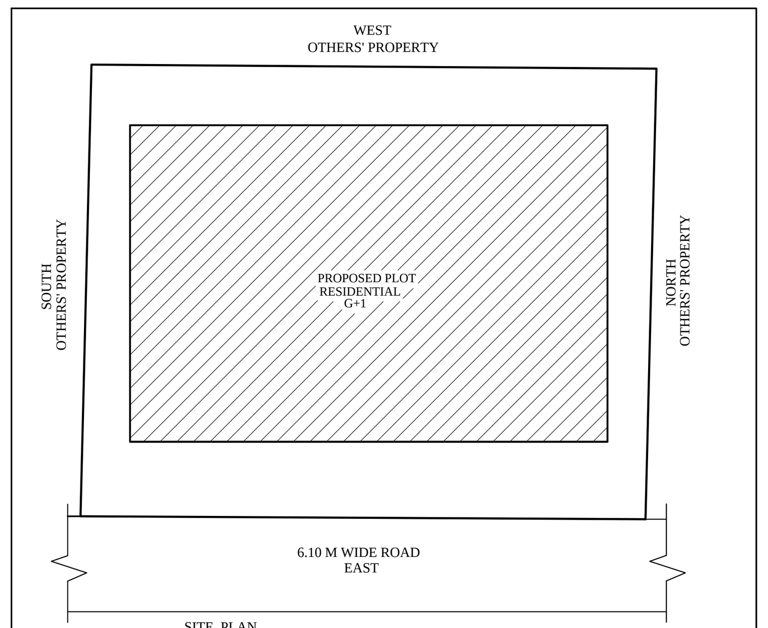

Key Plan

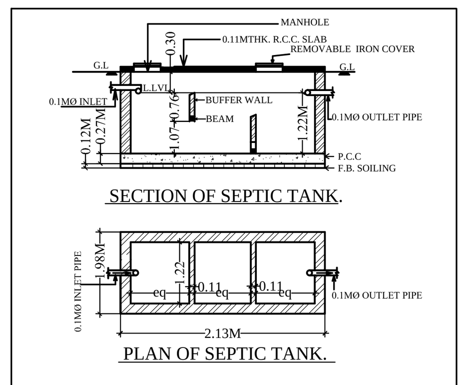

Septic Tank Detail

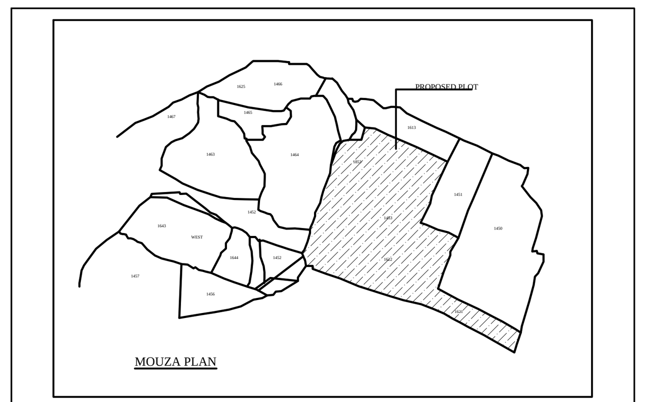

Location Plan

LEGEND

SL. NO.	SYMBOL	DESCRIPTION
1.		ROAD GULLY CUM SILT CHAMBER WITH 100Ø NP2
2.		PERCOLATION CHAMBER WITH 150Ø NP2
3.		PERCOLATION PIT
4.		WASTE WATER CHAMBER
5.		100Ø R.W.P. FROM BUILDING TERRACE

GENERAL SPECIFICATION :-

FOUNDATION : PLAIN CEMENT CONCRETE AS PER DESIGN. : R.C.C. COLUMN FOOTING & COLUMN AS PER : STRUCTURAL DESIGN.
SUPER STRUCTRE : R.C.C. COLUMN & BEAM AS PER STR . DESIGN. :9" THK. EXT. WALL & 4.5" THK. PARTITION WALL. : IN CEMENT MORTAR. : R.C.C. ROOF SLAB AS PER STRUCTURAL DESIGN.
FLOOR : MOSAIC CAST IN SITU. : CERAMIC TILES DADO IN TOILET.
INTERNAL FINISH : CEMENT PLASTER WITH P.O.P & O.B.D.
SANITARY : VITROUS CHAINA CLAY SANITARY WARE : G.I. PIPE WATER SUPPLY. : P.V.C PIPE FOR SEWAGE DISPOSAL.
DOORS & WINDOW : AS PER SCHEDULE.
ELECTRICAL : COPPER WIRE WITH P.V.C. CONDUIT.

SCHEDULE OF DOORS & WINDOWS :-

SL.NO.	MKD.	SIZE	DESCRIPTION
1.	D	1.07M X 2.13M	Pannelled single shutter door.
2.	D1	0.91MX2.13M	Pannelled single shutter door.
3.	D2	0.76MX2.13M	Pannelled single shutter door.
4.	W	1.52MX1.22M	Glazed steel framed window 3. shutt.
5.	W1	1.22MX1.22M	Glazed steel framed window 2. shutt.
6.	V	0.61MX0.61M	Top hung steel ventilator.

SEPTIC TANK CALCULATION-
TOTAL NO OF FLAT = 2 NOS. (1 NO @ 2 FLOORS)
TOTAL NUMBER OF USER/PERSON = 10
10% EXTRA USER/PERSON = 2
SEPTIC TANK DESIGN FOR 12 USER/PERSON.
VOLUME OF SEPTIC TANK= @ 0.084 cu.m X 12 = 1.008 cu.m
SIZE OF SEPTIC TANK = 2.13M x 1.22M x 1.22M = 3.17 Sqm.

WATER TANK CALCULATION-
WATER CONSUMPTION\HEAD\DAY=135 LITRE
TOTAL NUMBER OF USER/PERSON = 10
10% EXTRA USER/PERSON = 2
WATER TANK DESIGN FOR 12 USER/PERSON.
CAPICITY OF WATER TANK = 1620LITRE = 1.62 CUM
SIZE OF WATER TANK PROVIDED = 3000 L SYNTEX

PARKING CALCULATION-
FIRST FLOOR AREA = 71.60 Sqm
SECOND FLOOR AREA = 71.60 Sqm
TOTAL N0 OF CAR PARKING REQUIRED FOR 1ST & 2ND FLOOR =2
REQUIRED PARKING AREA = 2X20 SQM = 40 SQM
PARKING AREA PROVIDED AT GROUND FLOOR = 51.30 SqM

A PROPOSED RESIDENTIAL BUILDING OF:-
MRS. VIBHA SINGH
W/O AJAY KUMAR SINGH
MOUZA-DIMNA
THANA- MANGO
THANA NO- 1150
WAED NO - 10 M.N.A.C
KHATA NO- 425
PLOT NO- 1453(P)

SCALE :-1:100	NORTH	SHEET NO. 1
DATE :-		1/1

JAMSHEDPUR NOTIFIED AREA COMMITTEE JAMSHEDPUR
(Area Statement for Residential Individual Building)

Name of Applicant :- 1.SRI RAJ KUMAR DUTTA & OTHER'S.
Plot NO :-_____ Khata No :-_____ Mauza :-_____ Thana :-_____
Holding NO/ Area :-_____

Particulars	Existing	Proposed	Total	BUILT UP AREA (FOR F.A.R)
Covered Area				
(A) Basement/ Semi Basement				
(B) Ground Floor		109 Sqm.	109 Sqm.	59 Sqm.
(C) 1st Floor		109 Sqm.	109 Sqm.	109 Sqm.
(D) 2nd Floor				
(E) 3rd Floor				
TOTAL		218 Sqm.	218 Sqm.	168 Sqm.

$\%\text{Ground Coverage} = \frac{109}{185} \times 100 = 58.9\%$ OF PLOT AREA

$\text{F.A.R} = \frac{168}{185} = 0.90$

Signature of applicant

Signature of Licensed Engineer
Name & License No.

SIGNATURE OF ARCHITECT

SIGNATURE ATTORNEY HOLDER/OWNER

APPROVED

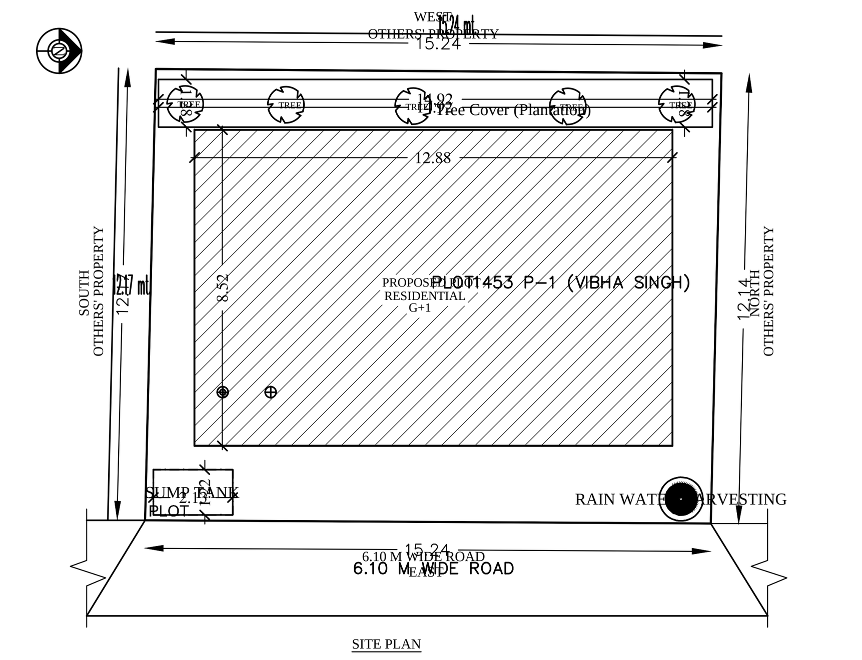

SITE PLAN

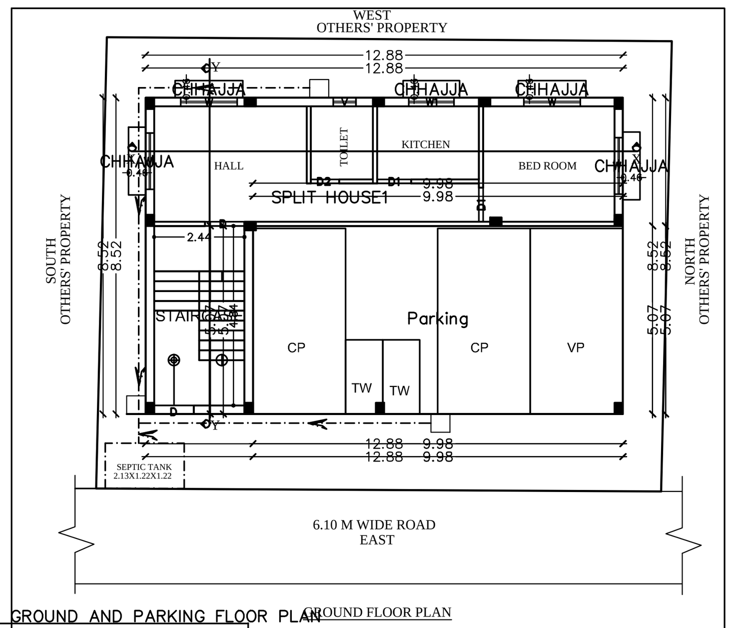

GROUND AND PARKING FLOOR PLAN

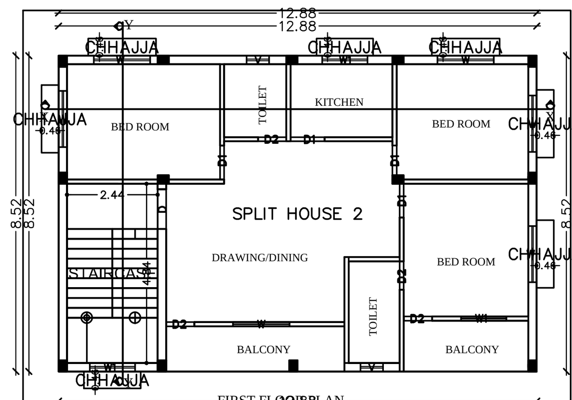

FIRST FLOOR PLAN

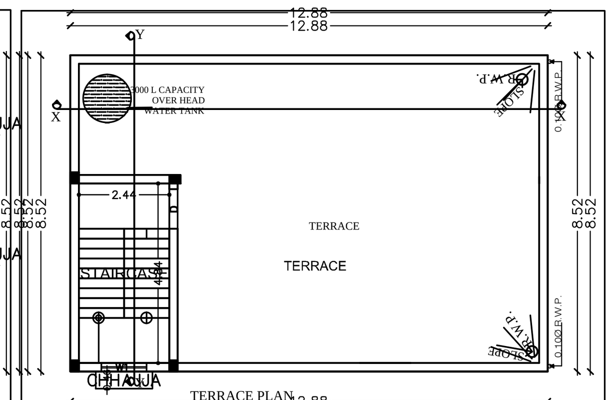

TERRACE FLOOR PLAN

PLOT1453 P (VIBHA SINGH)

AREA STATEMENT: MANGO MUNICIPAL CORPORATION	VERSION NO.: 1.0.27
	VERSION DATE: 16/10/2020
PROJECT DETAIL :	
Inward_No. : -	Plot Use : Residential
Region : JHARKHAND URBAN LOCAL BODIES	Plot SubUse : Other Residential Building
District : RANCHI	Land Use Zone : NA
Application Type : General Proposal	Abutting Road Width : -
Project Type : Development Permission	Plot No. : -
Nature of Development : New	Revenue Survey No/Survey No : -
Location : Old Area	Thana No : -
Sub Location : NA	Holding No : -
Village/Mauza Name : -	Khata No : -
Ward No : -	North : -
Road/Street : -	South : -
	East : -
	West : -

AREA DETAILS :		SQ.MT.
AREA OF PLOT (Minimum)	(A)	185.19
Net Plot Area (Gross Plot Area - Deduction from Gross Plot area)	(A-Deductions)	185.19
Deductions for Balance Plot Area (from Gross Plot Area)		
COP Area		19.16
Total		19.16
Balance Plot Area (Net Plot Area - Recreational/Amenity space)	(A-Deductions)	166.03
Plot Area for Coverage (Net Plot Area)	(A-Deductions)	185.19
Plot Area for FSI (Net Plot Area + RoadWidening Area)	(A-Deductions)	185.19
COVERAGE CHECK		
Proposed Coverage Area (59.25 %)		109.73
Total Coverage Area (59.25 %)		109.73
FAR CHECK		
Proposed Area of FAR		219.46
Total Area of FAR		219.46
BUILT UP AREA CHECK		
Total Proposed BuiltUp Area		270.03

ARCH / ENGG / SUPERVISOR (Regd)	OWNER
DEVELOPMENT AUTHORITY	LOCAL BODY

COLOR INDEX
PLOT BOUNDARY
ABUTTING ROAD
PROPOSED WORK (COVERAGE AREA)
EXISTING (To be retained)
EXISTING (To be demolished)

Color Index:
PARKING CALCULATION:

Parking Type	Prop No.	Prop Area
Car Parking	2	25.00
Visitors Car Parking	1	12.50
Two Wheeler Parking	2	4.00
Other Parking	1	9.07
Total Area	6	50.57

MARGIN DETAIL:

Building / Wing Name	Road Name	Front Margin	Rear Margin	Side1 Margin	Side2 Margin
PLOT1453 P-1 (VIBHA SINGH)	6.10 M WIDE ROAD	2.01	1.53	1.08	1.08

FAR & Tenement Details (Table 4c-1)

Building	No. of Same Bldg	Total Built Up Area (Sq.mt.)	Deductions (Area in Sq.mt.)	Proposed FAR Area (Sq.mt.)	Total FAR Area (Sq.mt.)	Tnmt (No.)
			Parking	Resi.		
PLOT1453 P (VIBHA SINGH)	1	270.03	50.57	219.46	219.46	02
Grand Total :	1	270.03	50.57	219.46	219.46	02

Building :PLOT1453 P (VIBHA SINGH)

Floor Name	Total Built Up Area (Sq.mt.)	Deductions (Area in Sq.mt.)	Proposed FAR Area (Sq.mt.)	Total FAR Area (Sq.mt.)	Tnmt (No.)
		Parking	Resi.		
Ground And Parki...	160.30	50.57	109.73	109.73	01
First Floor...	109.73	0.00	109.73	109.73	01
Terrace Floor...	0.00	0.00	0.00	0.00	00
Total :	270.03	50.57	219.46	219.46	02
Total Number of Same Buildings :	1				
Total :	270.03	50.57	219.46	219.46	02

SCHEDULE OF JOINERY:

BUILDING NAME	NAME	LENGTH	HEIGHT	NOS
PLOT1453 P (VIBHA SINGH)	D2	0.76	2.13	05
PLOT1453 P (VIBHA SINGH)	D1	0.91	2.13	06
PLOT1453 P (VIBHA SINGH)	D	1.07	2.10	04
Total	-	-	-	15

SCHEDULE OF JOINERY:

BUILDING NAME	NAME	LENGTH	HEIGHT	NOS
PLOT1453 P (VIBHA SINGH)	V	0.61	1.00	03
PLOT1453 P (VIBHA SINGH)	W1	1.22	1.20	05
PLOT1453 P (VIBHA SINGH)	W	1.52	1.20	10
Total	-	-	-	18

UnitBUA Table for Building :PLOT1453 P (VIBHA SINGH)

FLOOR	Name	UnitBUA Type	UnitBUA Area	Carpet Area	No. of Rooms	No. of Tenement
GROUND AND PARKING FLOOR PLAN	SPLIT HOUSE1	FLAT	59.16	49.77	5	1
FIRST FLOOR PLAN	SPLIT HOUSE 2	FLAT	109.73	97.60	9	1
Total	-	-	168.89	147.37	14	2