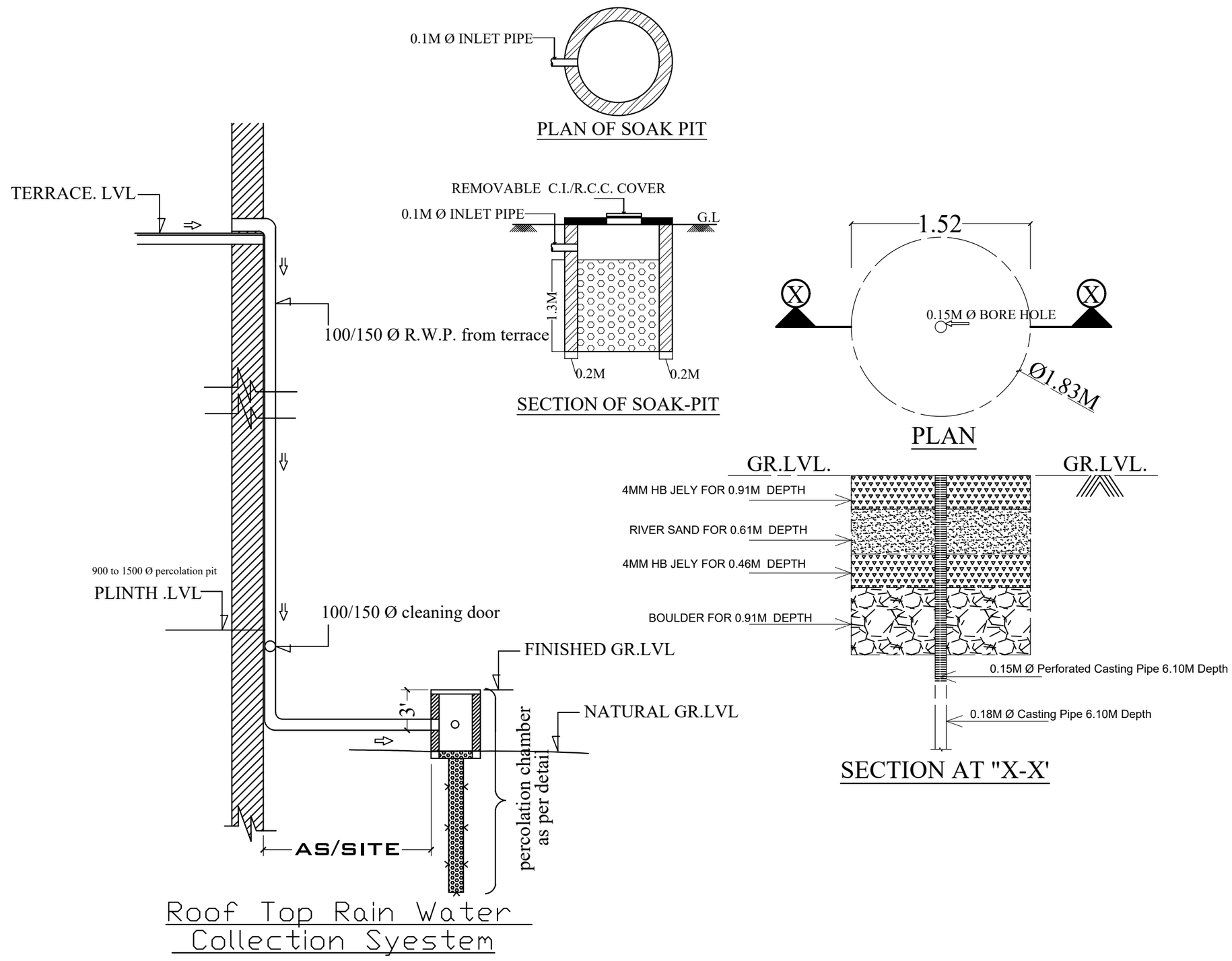

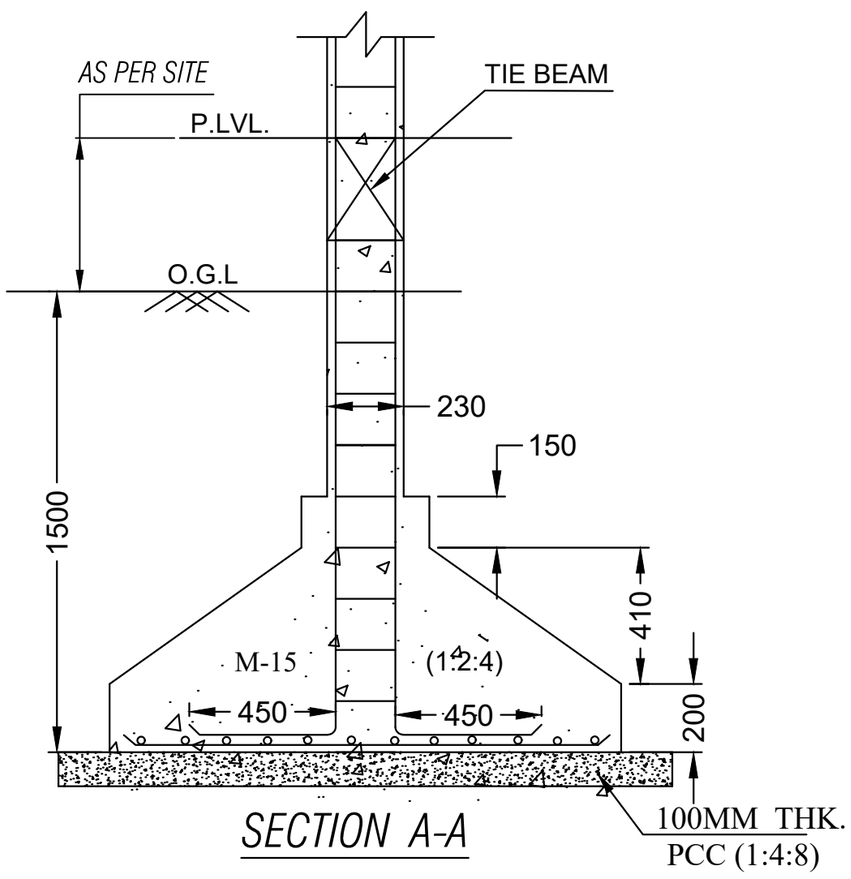

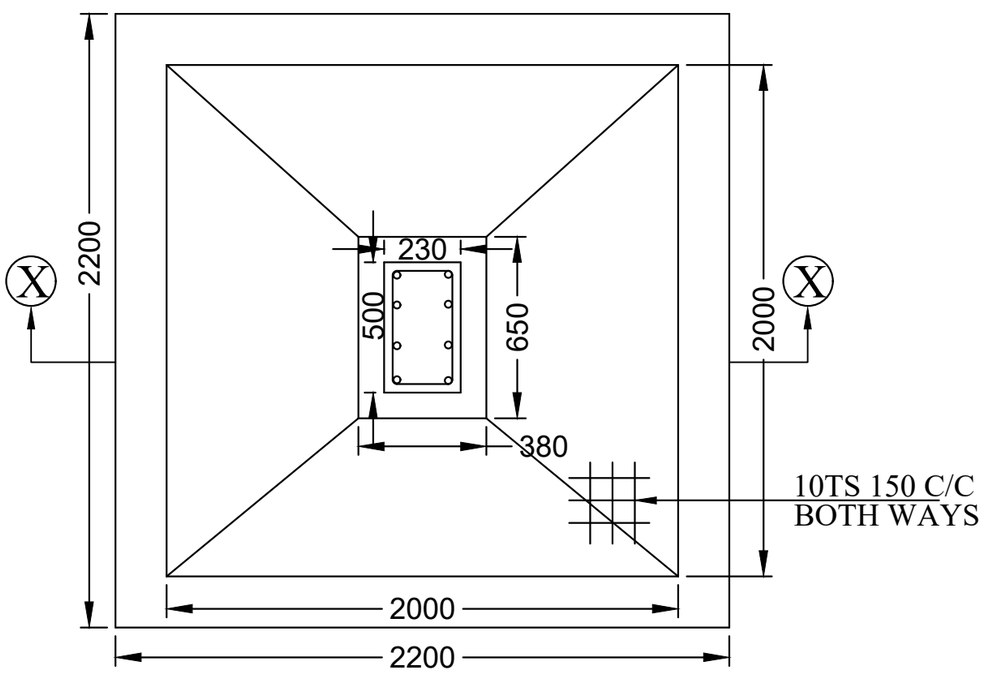

Structure Detail