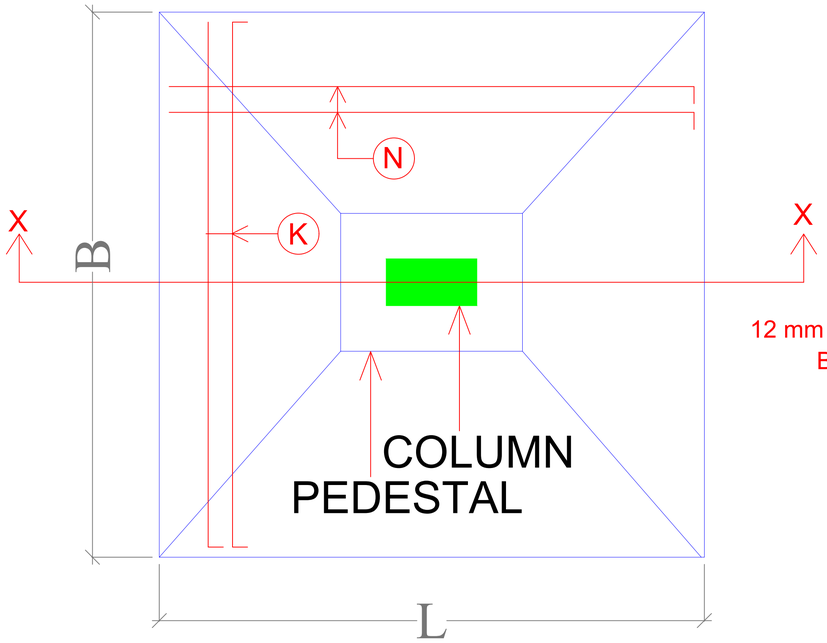

PLAN OF ISOLATED FOOTING

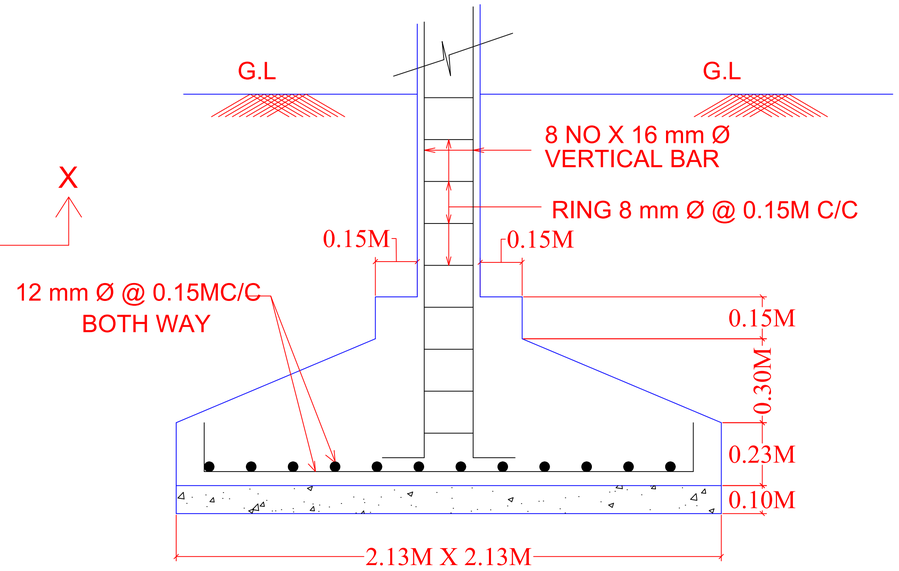

SECTION OF FOOTING .

SIZE - 2.13M X 2.13M

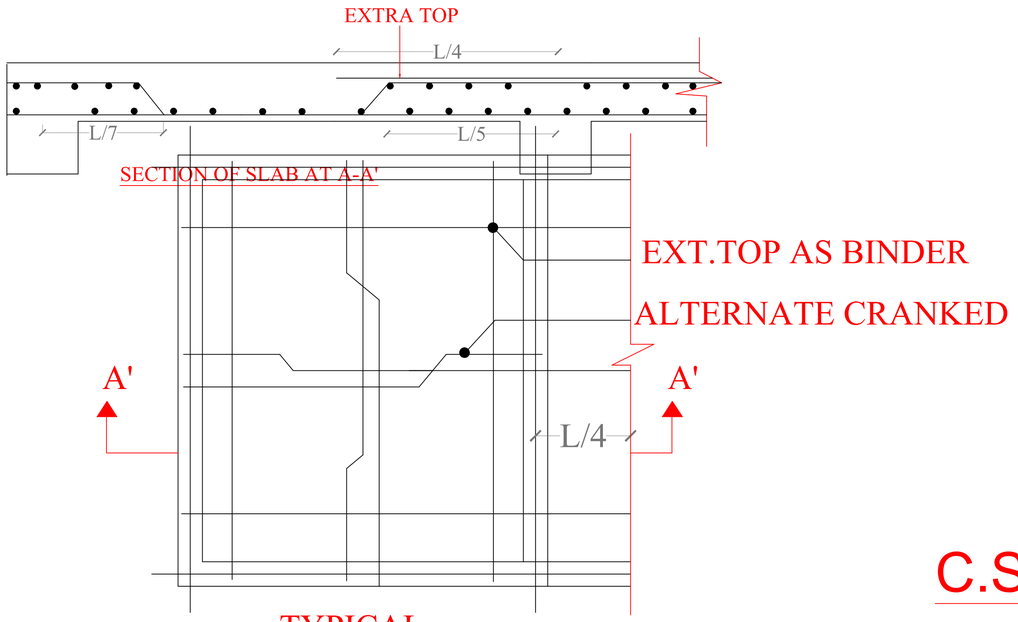

TYPICAL

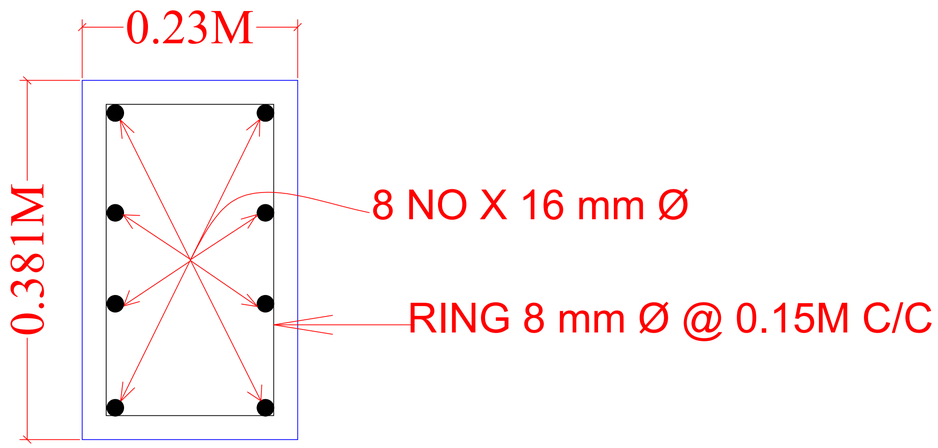

C.S. OF COLUMN .

SIZE - 0.23M X 0.381M

STRUCTURAL DETAILS