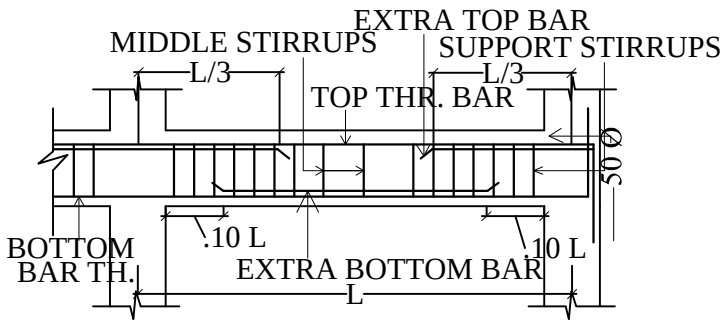

SECTION OF TYPICAL FLOOR BEAM

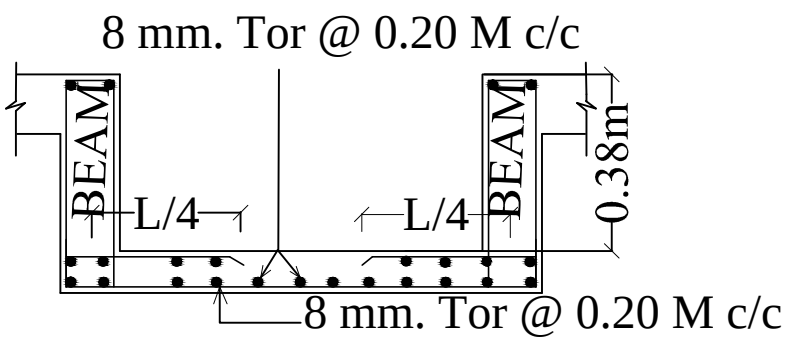

THICKNESS OF SUNKEN
SLAB = 0.115m

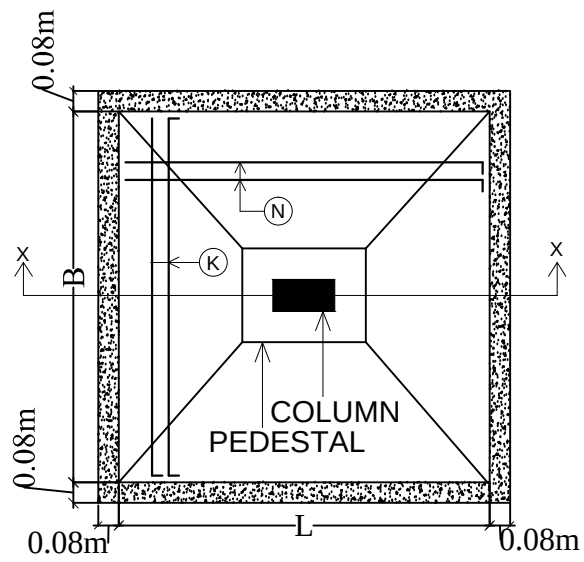

PLAN OF ISOLATED FOOTING

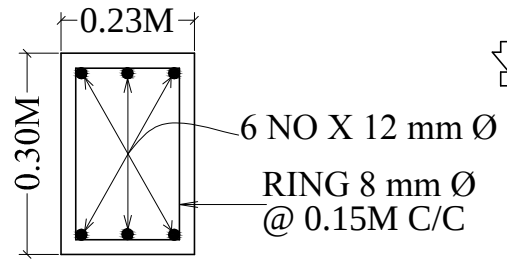

C.S. OF TIE BEAM
SIZE - 0.23M X 0.30M

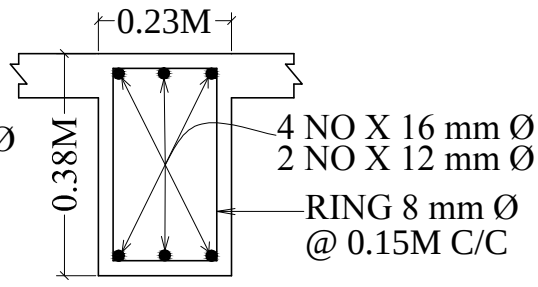

C.S. OF ROOF BEAM
SIZE - 0.23M X 0.38M

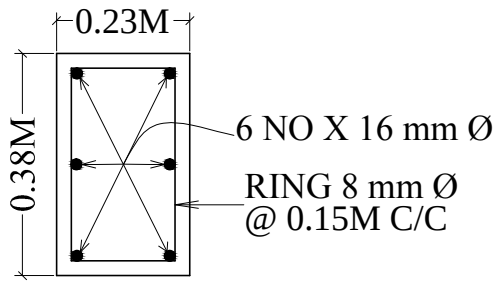

C.S. OF COLUMN .
SIZE - 0.23M X 0.38M

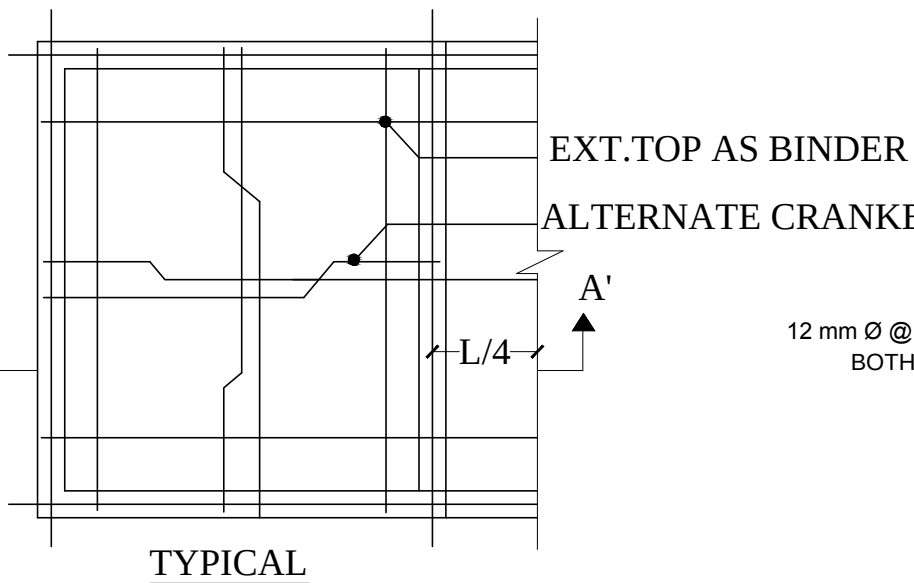

TYPICAL

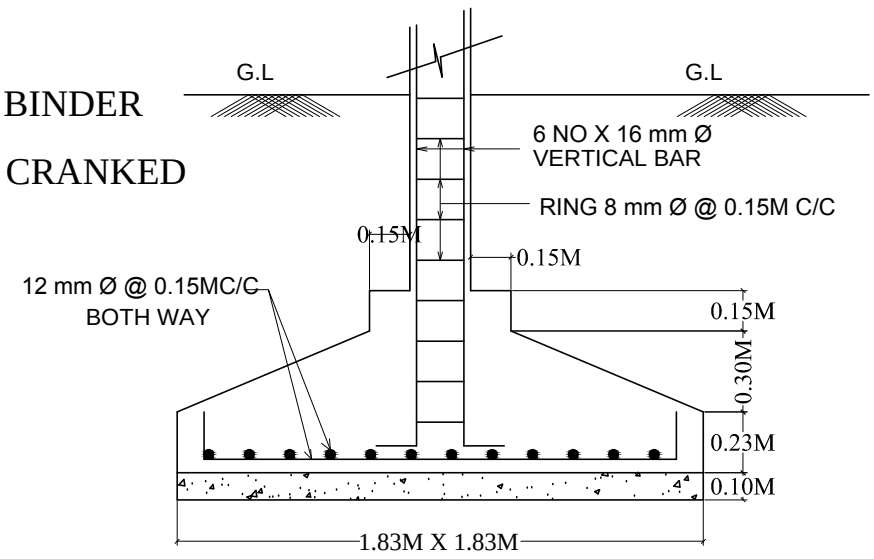

SECTION OF FOOTING .
SIZE - 1.83M X 1.83M

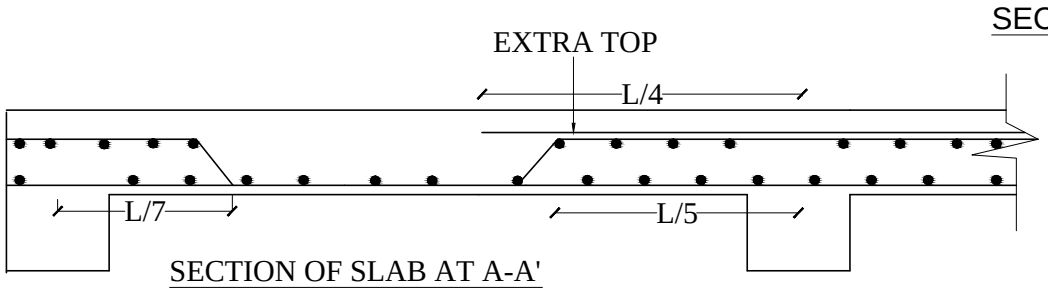

SECTION OF SLAB AT A-A'

Structure Detail