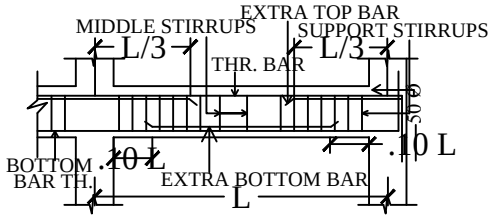

SECTION OF TYPICAL ROOF BEAM

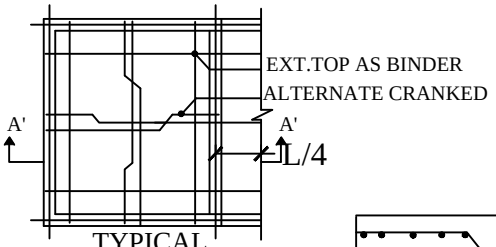

TYPICAL

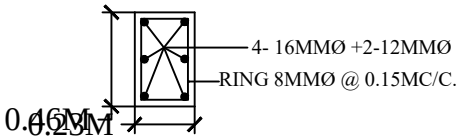

SECTION OF COLUMN.

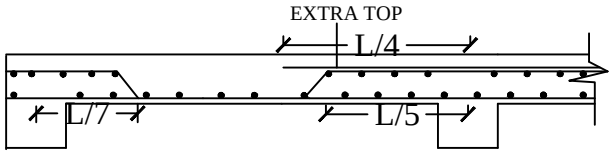

SECTION OF SLAB AT A-A'

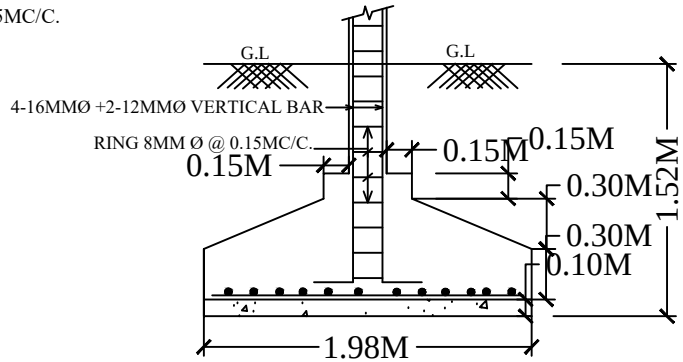

SECTION OF FOOTING

Structure Detail