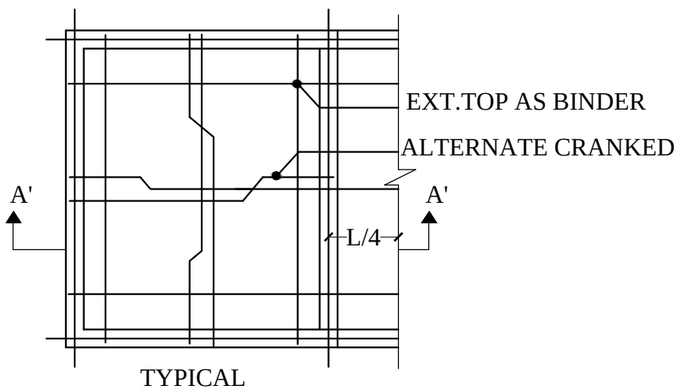

TYPICAL

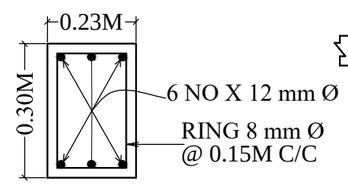

C.S. OF TIE BEAM

SIZE - 0.23M X 0.30M

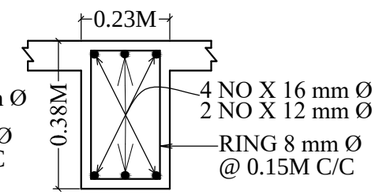

C.S. OF ROOF BEAM

SIZE - 0.23M X 0.38M

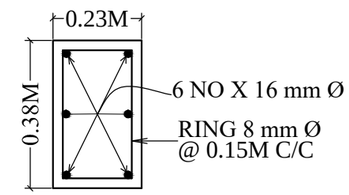

C.S. OF COLUMN .

SIZE - 0.23M X 0.38M

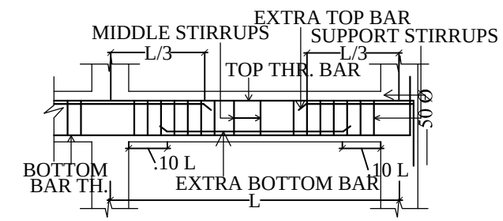

SECTION OF TYPICAL FLOOR BEAM

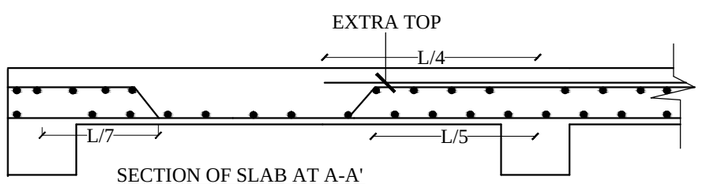

SECTION OF SLAB AT A-A'

8 mm. Tor @ 0.20 M c/c

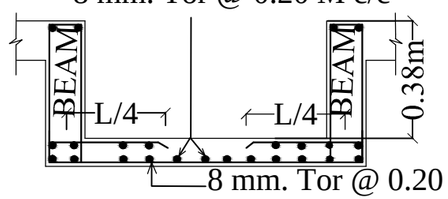

THICKNESS OF SUNKEN

SLAB = 0.115m

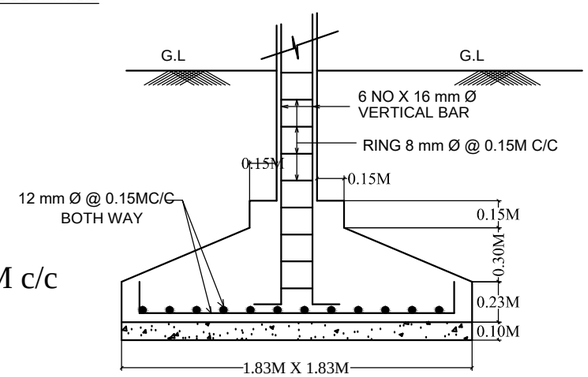

SECTION OF FOOTING .

SIZE - 1.83M X 1.83M

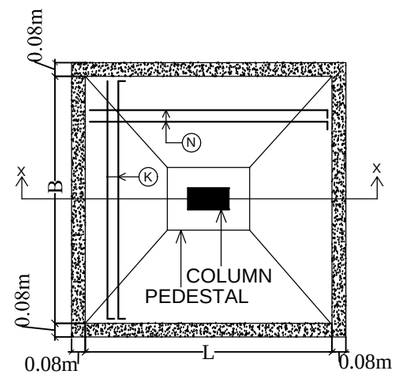

PLAN OF ISOLATED FOOTING

Structure Detail