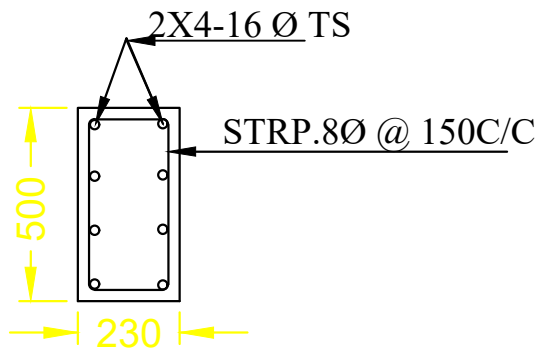


C/S OF COL.

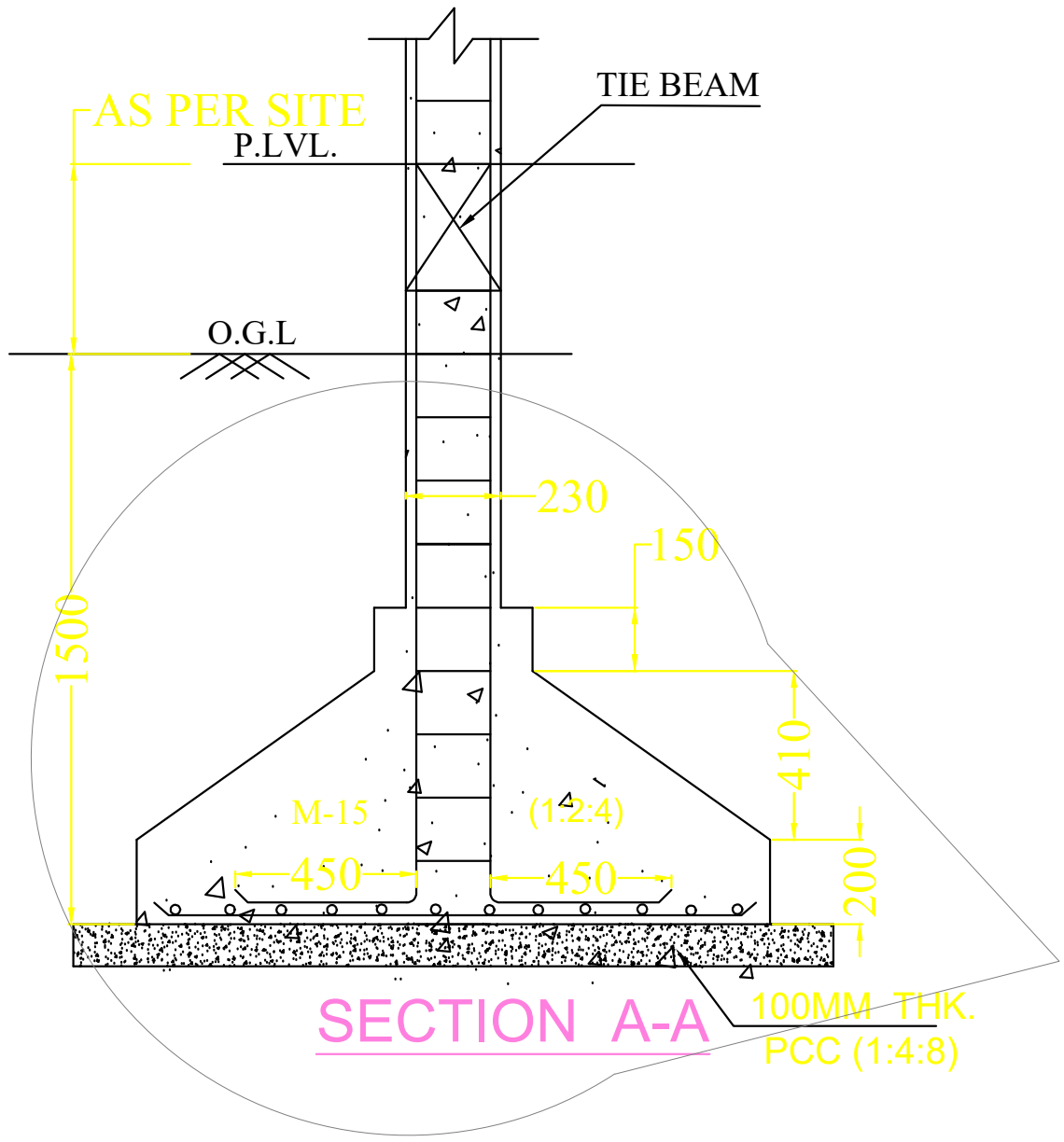


SECTION A-A

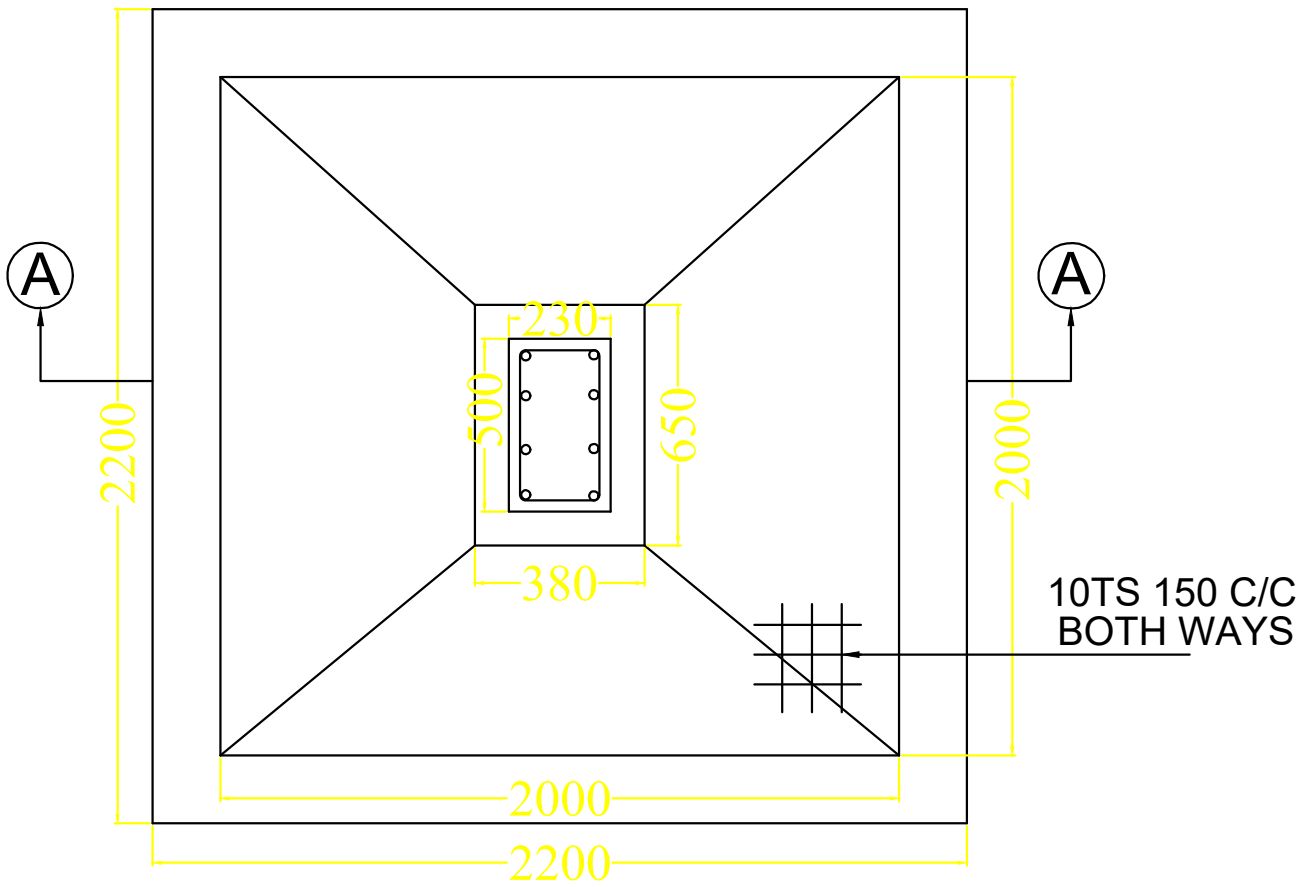


PLAN

FOOTING PLAN (AS/STRL. DESIGN)
SCALE N.T.S

Structure Detail