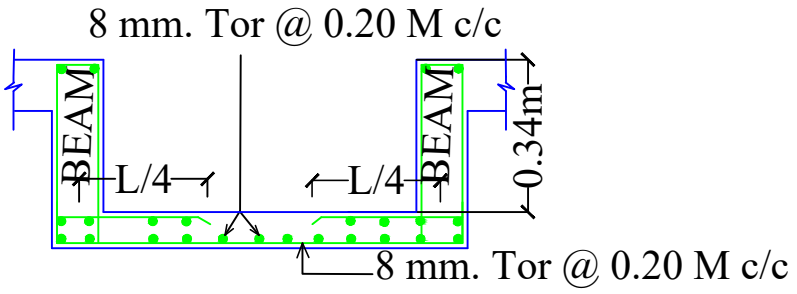

THICKNESS OF SLAB = 0.11m

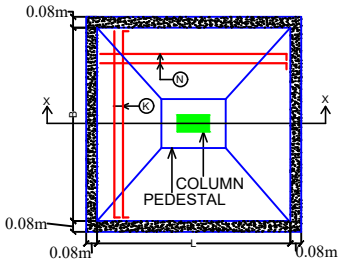

PLAN OF ISOLATED FOOTING

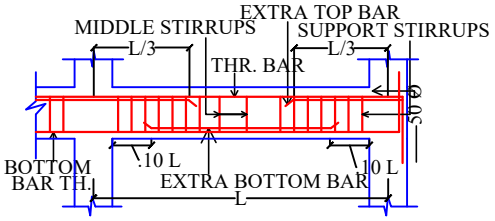

SECTION OF TYPICAL ROOF BEAM

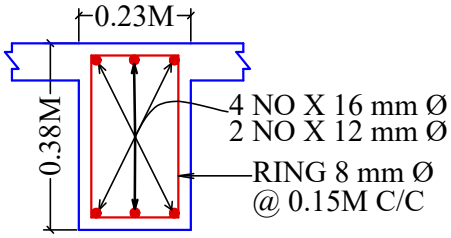

C.S. OF ROOF BEAM

SIZE - 0.23M X 0.38M

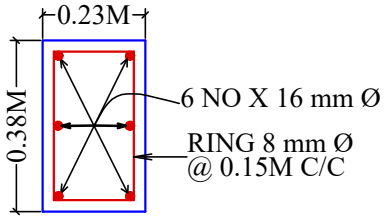

C.S. OF COLUMN .

SIZE - 0.23M X 0.38M

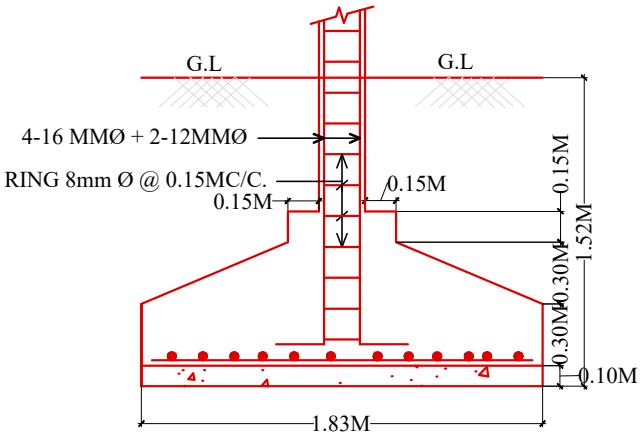

SECTION OF FOOTING