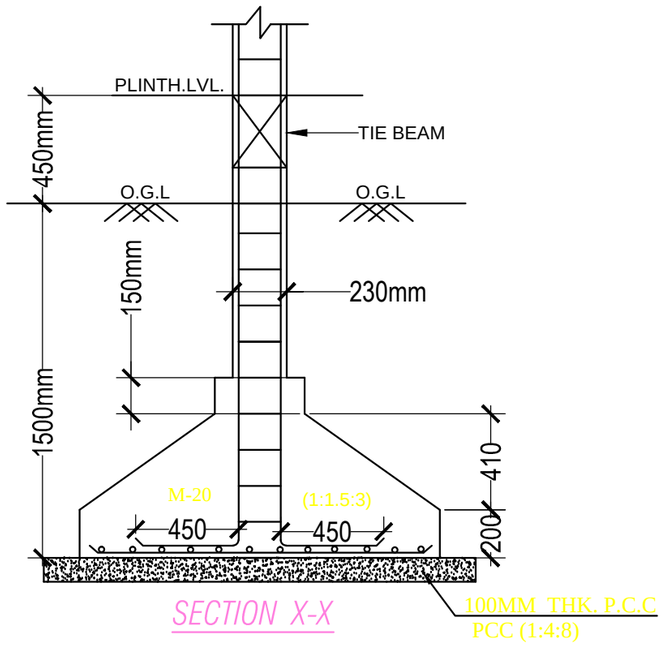

SECTION X-X

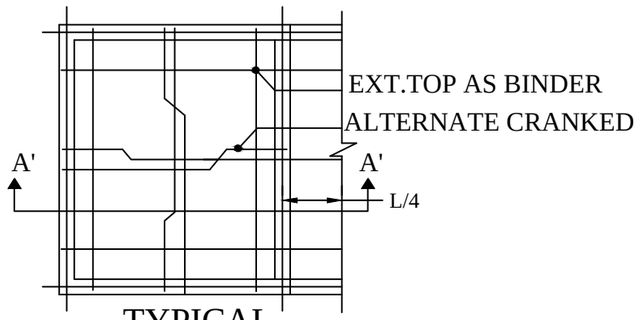

TYPICAL

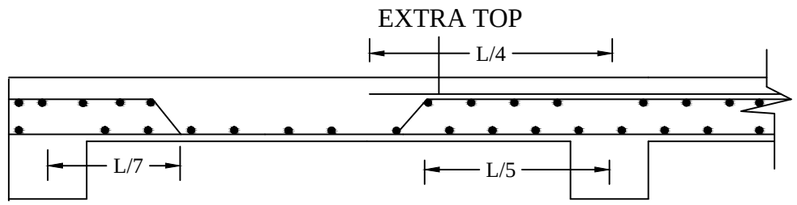

SECTION OF SLAB AT A-A'

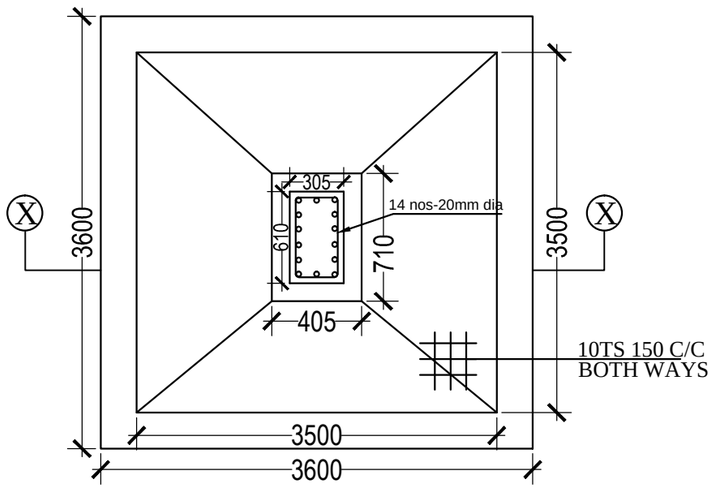

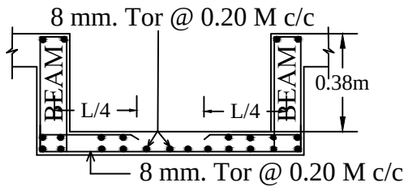

THICKNESS OF SLAB = 0.1m

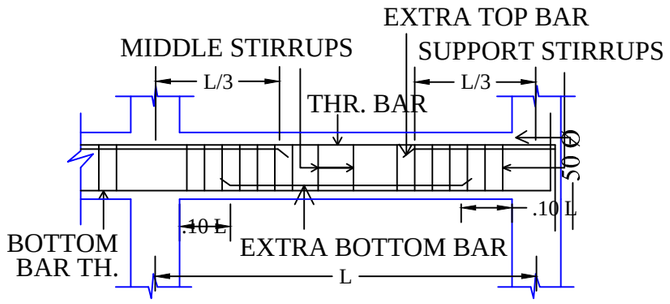

SECTION OF TYPICAL ROOF BEAM

Structure Detail