Project Title :MOHAN LAL VIJAY

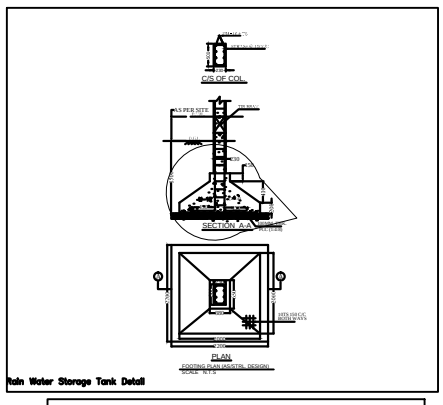

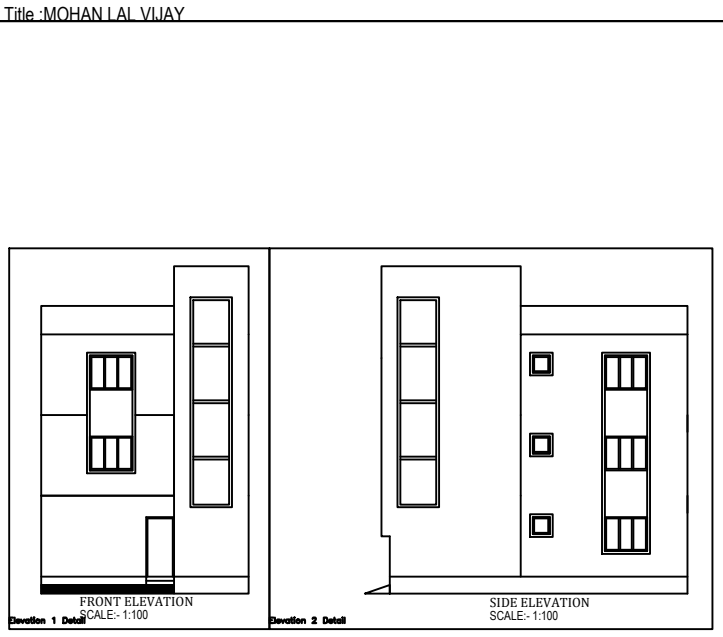

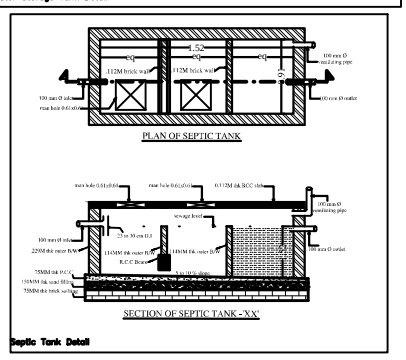

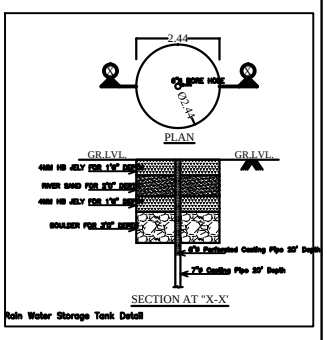

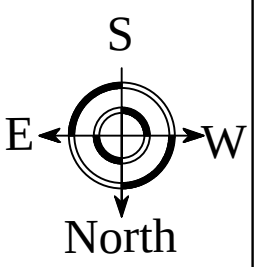

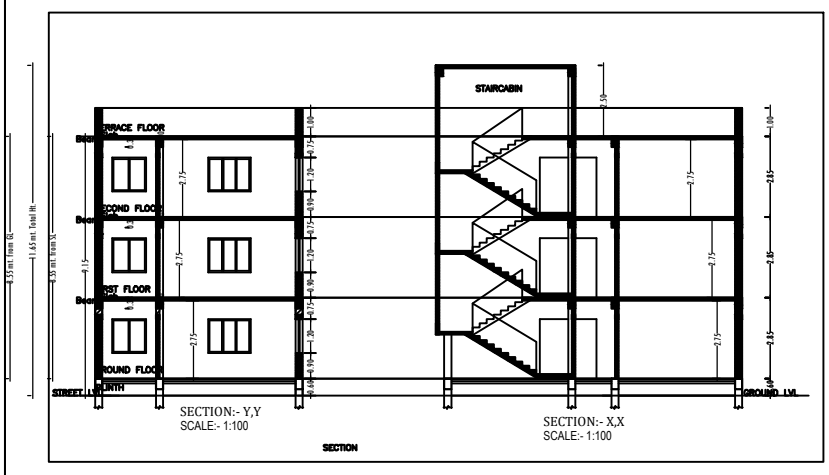

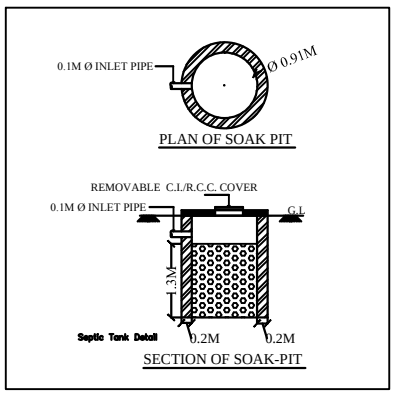

GENERAL SPECIFICATION:-

FOUNDATION	: Plain Cement Concrete As Per Design.
	: R.C.C Column Footing & Column As Per Structure Design.
SUPER STRUCTURE	: R.C.C Column And Beam As Per Structure Design.
	: 0.23M Thk External Wall & 0.11m Thk. Partition Wall In Cement Mortar.
	: R.C.C Roof Slab As Per Structure Design.
FLOOR	: LPS Flooring On P.C.C Bed. All Over Floor.
INTERNAL FINISH	: White Washing Over Cement Plaster.
SANITARY	: Vitreous China Sanitary Ware.
	: G.I. Pipe Water Supply.
	: C.I. Pipe For Disposal.
DOORS & WINDOWS	: As Per Schedule.
ELECTRICAL	: Copper Conductor With P.V.C. Conduct.

SCHEDULE OF DOORS & WINDOWS

SIZE	DESCRIPTION
1.22M X 2.13M	Paneled Single Shutter door.
1.07M X 2.13M	Paneled Single Shutter door.
0.91M X 2.13M	Paneled Single Shutter door.
0.84M X 2.13M	Paneled Single Shutter door.
0.76M X 2.13M	Paneled Single Shutter door.
1.52M X 1.22M	Glazed Steel Frame Window 3. Shutter.
1.22M X 1.22M	Glazed Steel Frame Window 3. Shutter.
0.61M X 0.61M	Top Hung Steel Ventilator.

PROPOSED BUILDING FOR:-

Mr. MOHAN LAL VIJAY
S/O- SRI RAMESH CHANDRA VIJAY
AT- TUNGRI, CHAIBASA, WEST SINGHBUM
P.S.- SADAR

THANA NO.-644
KHATA NO.- 303
PLOT NO.- 209
VILLAGE- TUNGRI
WEST SINGHBHUM (JHARKHAND)

SIGNATURE OF OWNER

SIGNATURE OF ENGINEER

SITE PLAN, FLOOR PLANS, ELEVATIONS (2-nos.), SECTIONS (2-nos.), AREA CALCULATION, LOCATION
PLAN, DRAINAGE PLAN, FOOTING DETAILS & WATER TANK

SHEET NO. = 1/1

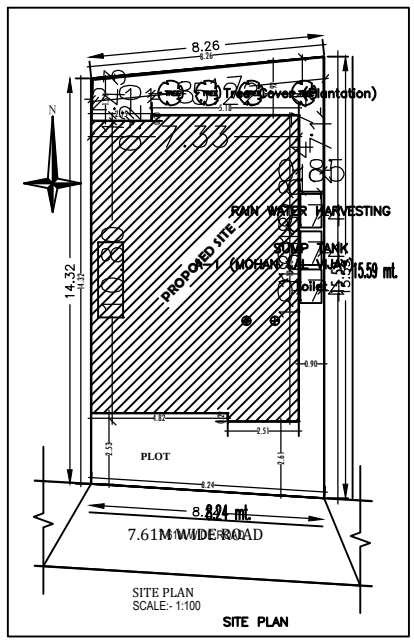

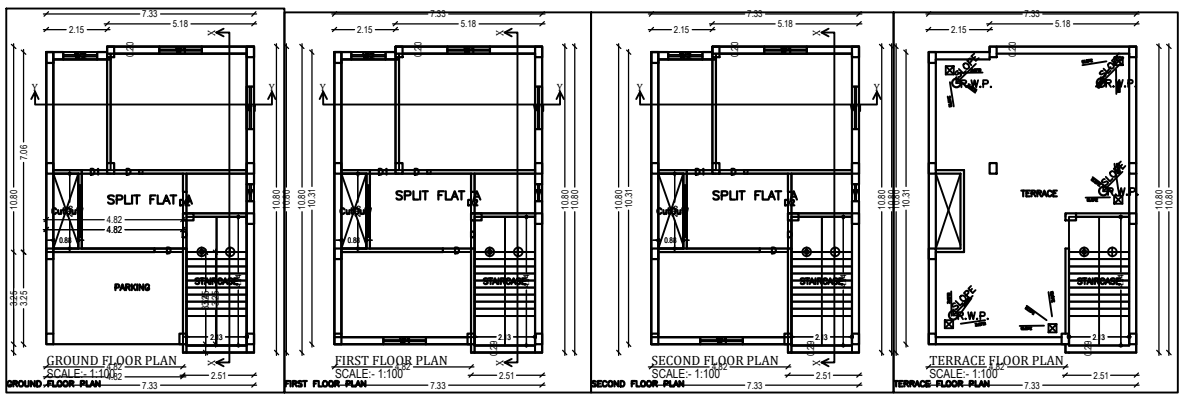

A (MOHAN LAL VIJAY)

Building :A (MOHAN LAL VIJAY)

Floor Name		Deductions					