PRODUCED BY AN AUTODESK EDUCATIONAL PRODUCT

STRUCTURAL DRAWING REF 005 DT 19-9-17

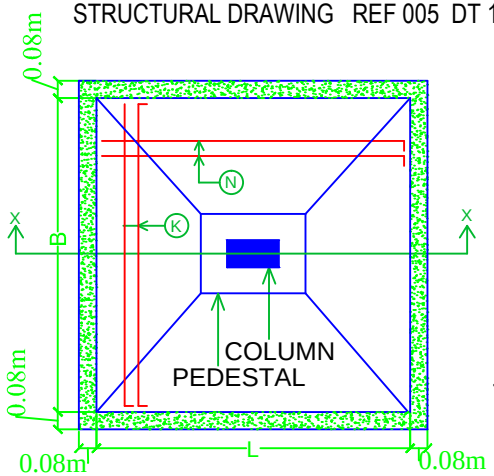

PLAN OF ISOLATED FOOTING

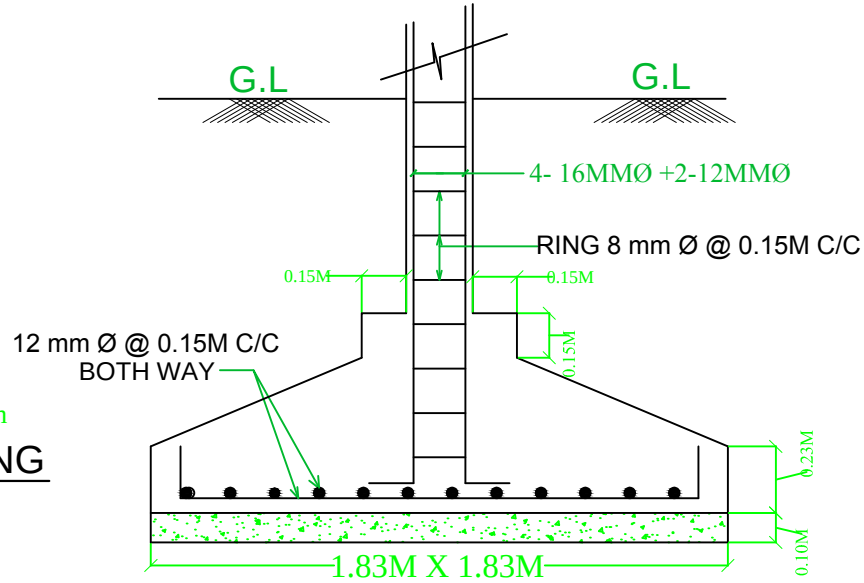

SECTION OF FOOTING .

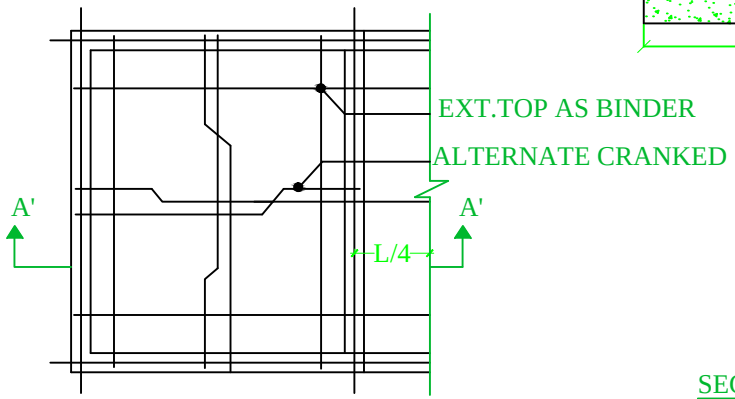

TYPICAL REINFORCEMENT DETAIL

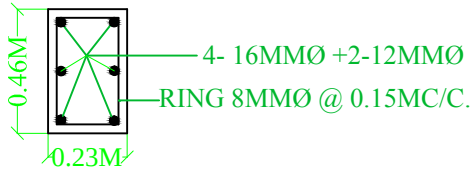

SECTION OF COLUMN.

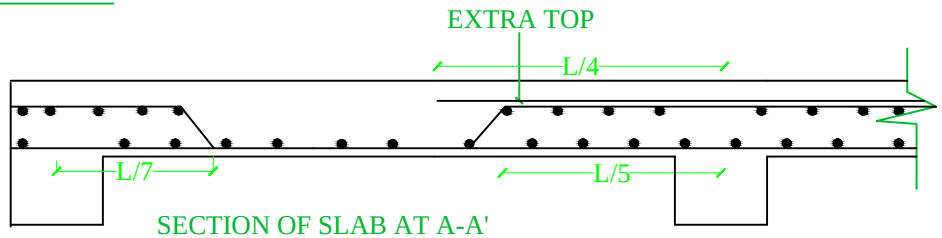

SECTION OF SLAB AT A-A'

Structure Detail

PRODUCED BY AN AUTODESK EDUCATIONAL PRODUCT

PRODUCED BY AN AUTODESK EDUCATIONAL PRODUCT

PRODUCED BY AN AUTODESK EDUCATIONAL PRODUCT