ref 82 dt 24-10-19

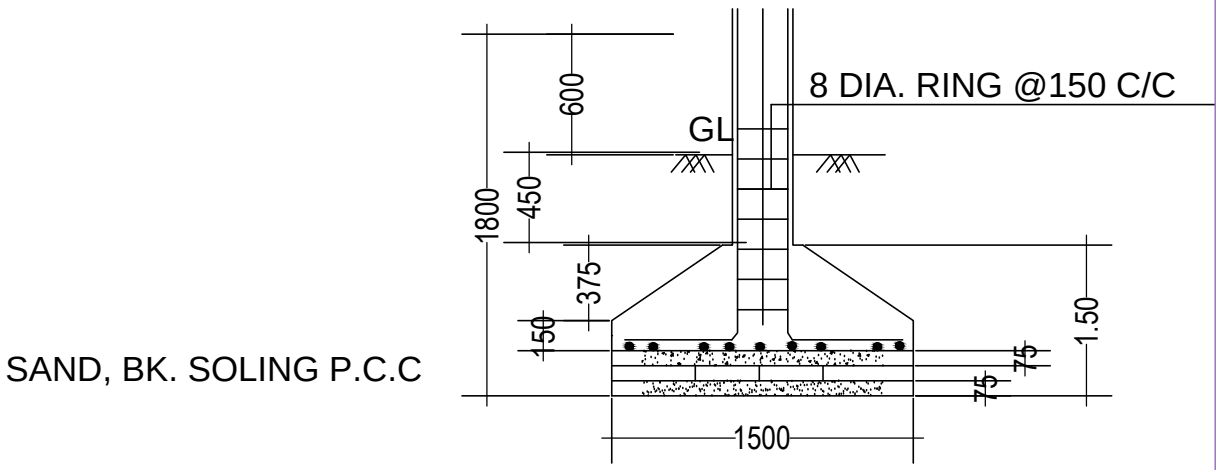


## SECTION ON C-C

SCALE- 1:50

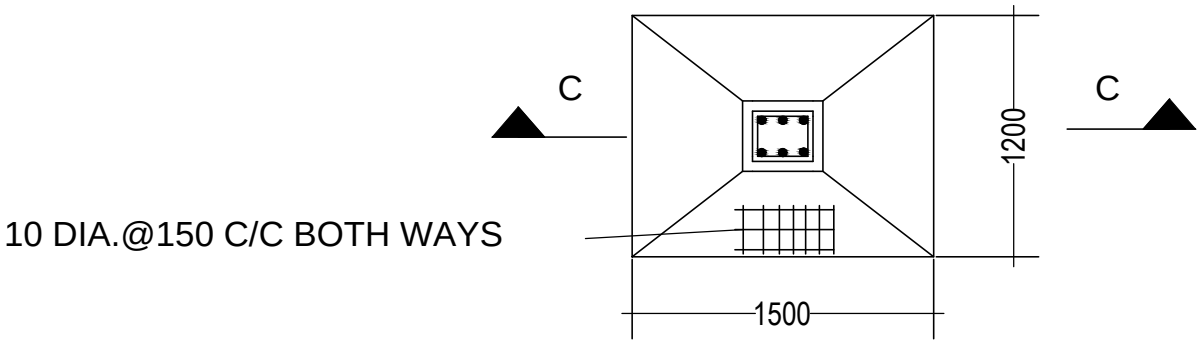


## DETAIL OF R.C.C. COLUMN

SCALE- N.T.S

Structure Detail