ref 82 dt 24-10-19

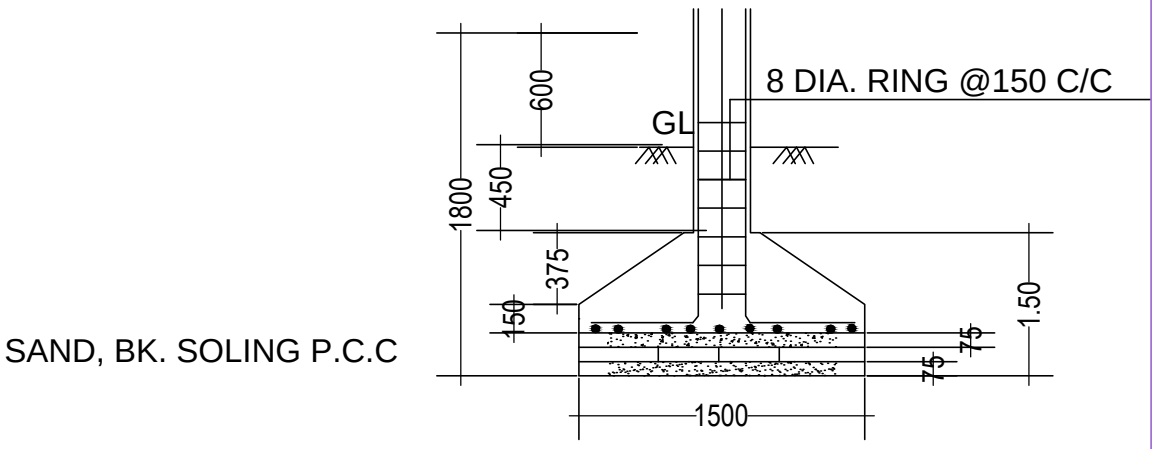

SECTION ON C-C

SCALE- 1:50

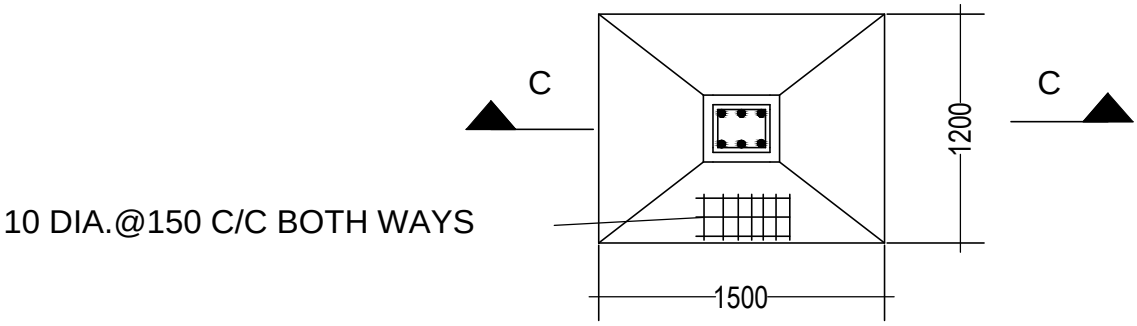

DETAIL OF R.C.C. COLUMN

SCALE- N.T.S

Structure Detail