27 DT 23-2-24

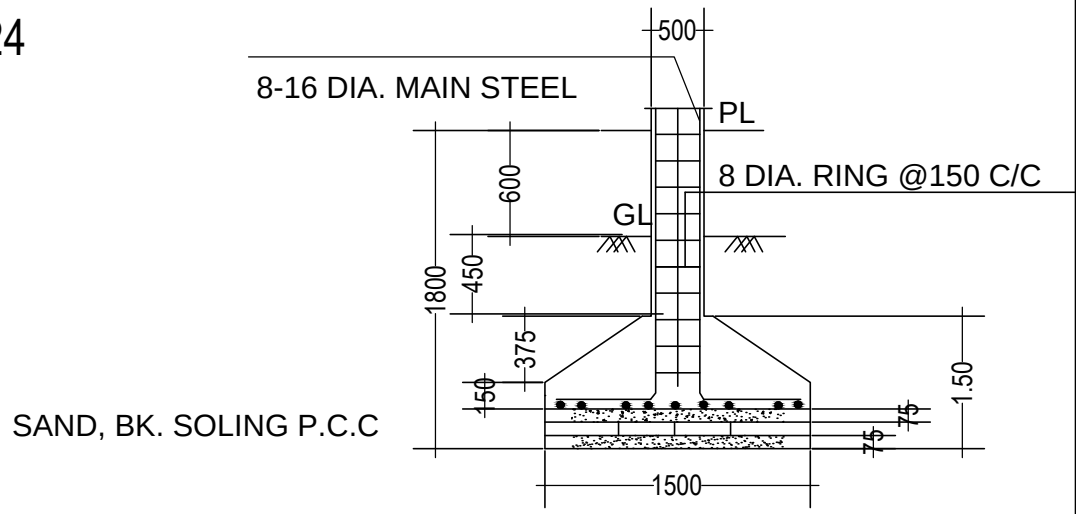

SECTION ON C-C

SCALE- 1:50

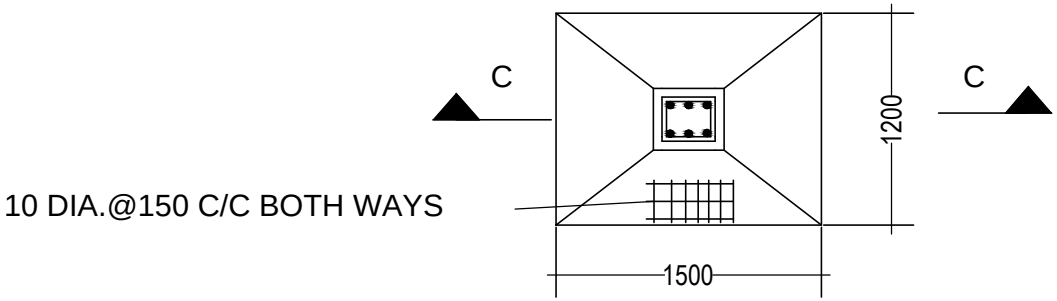

DETAIL OF R.C.C. COLUMN

SCALE- 1:50

Structure Detail