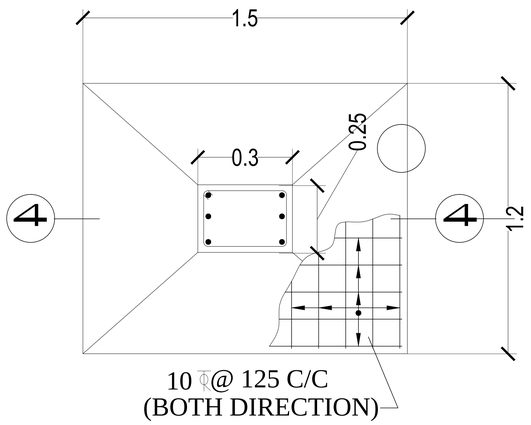

FOUNDATION PLAN OF COLUMN

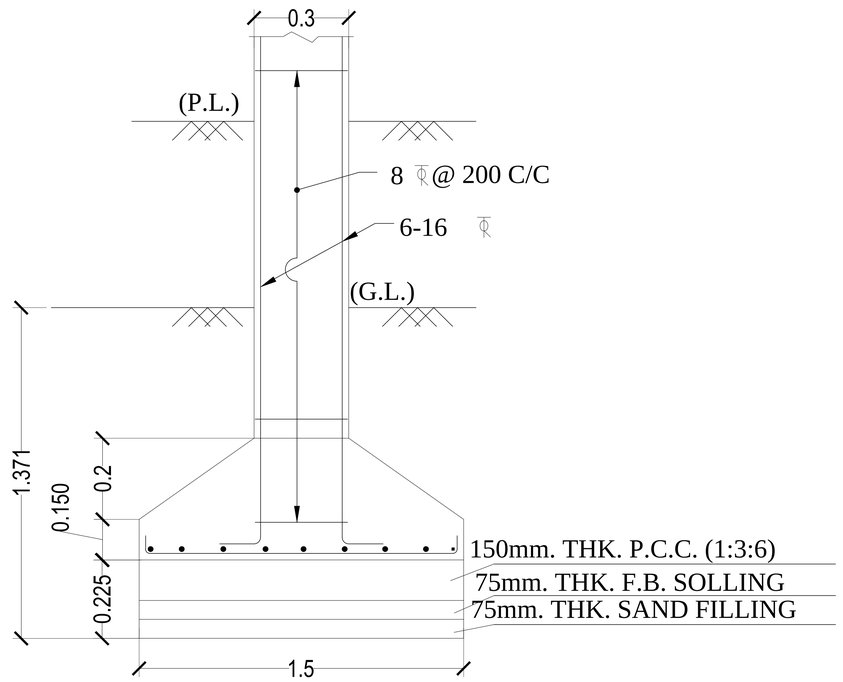

DET. OF FOUND.

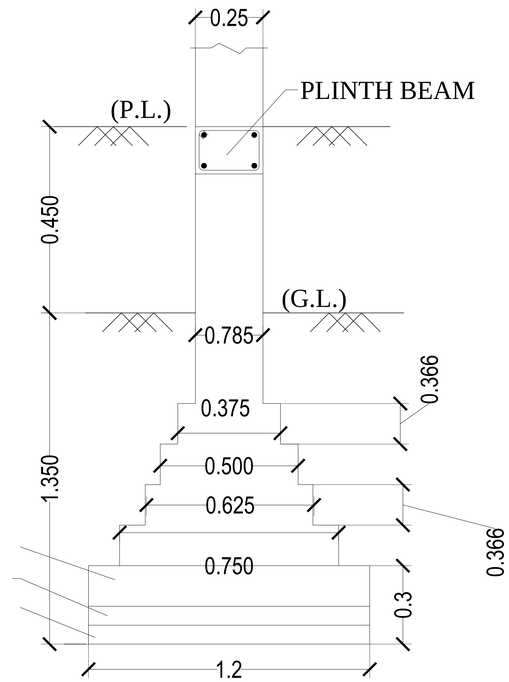

DET. OF WALL FOUND.

Structure Detail