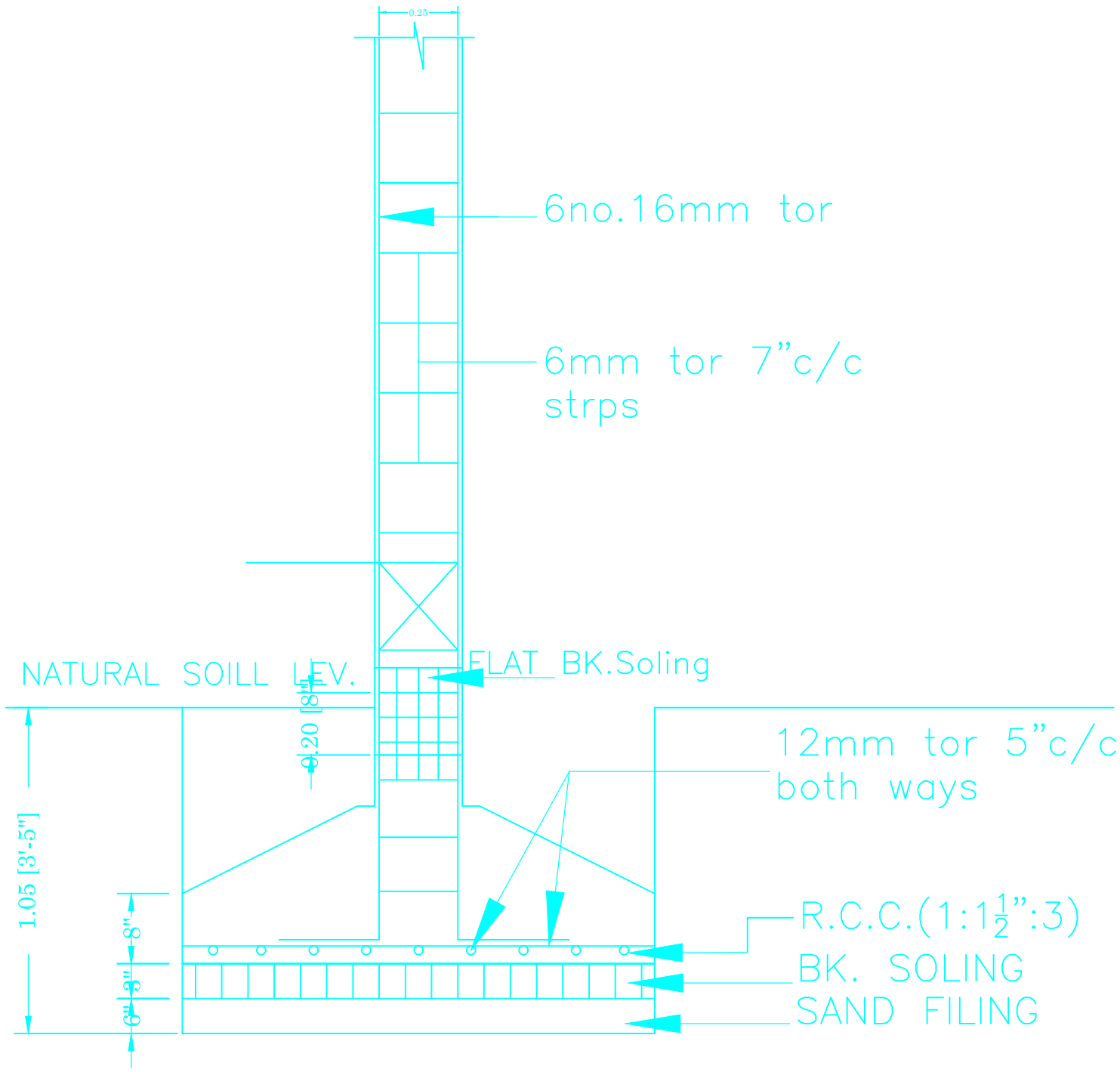

SEC. X–Y
R.C.C. COLUMN FDN.DETAIL

SCALE 1" = 2'–0"

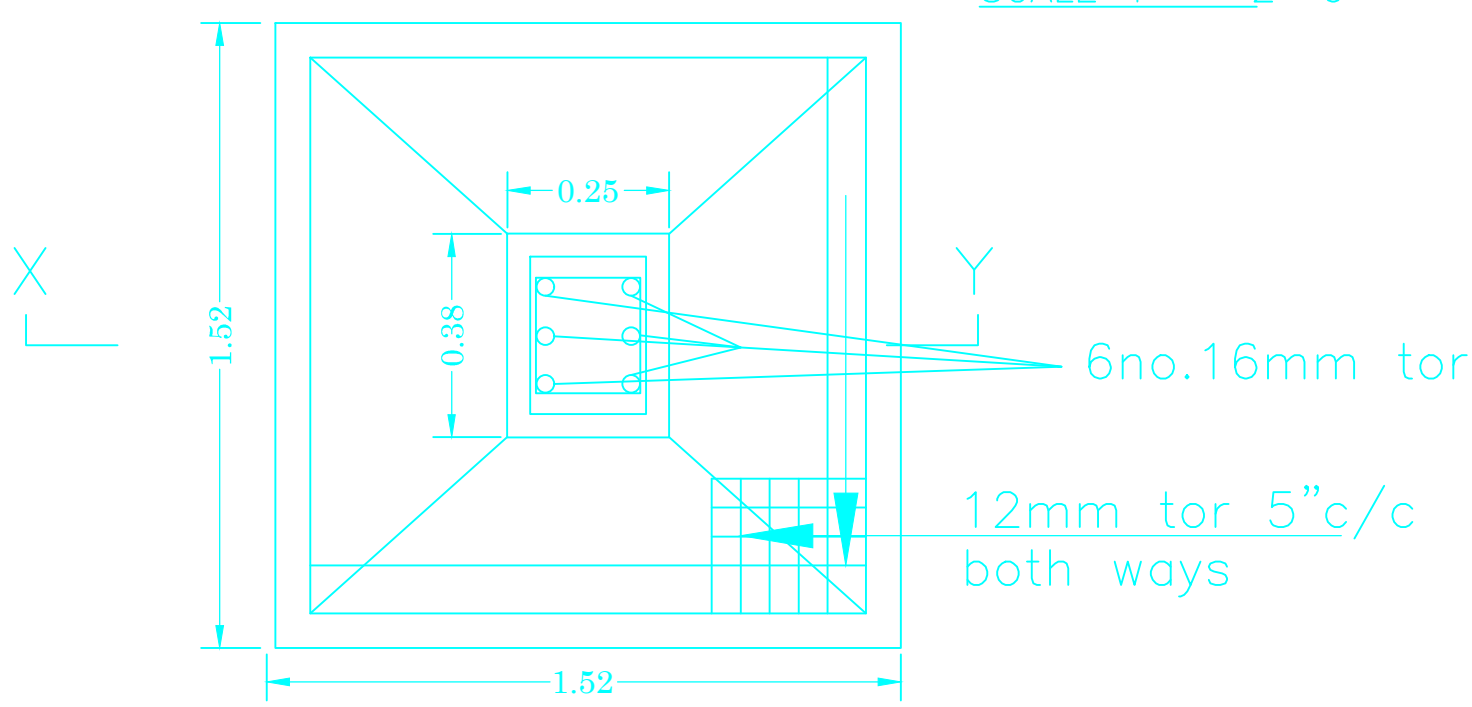

PLAN

SCALE–1":2'–0"

Structure Detail