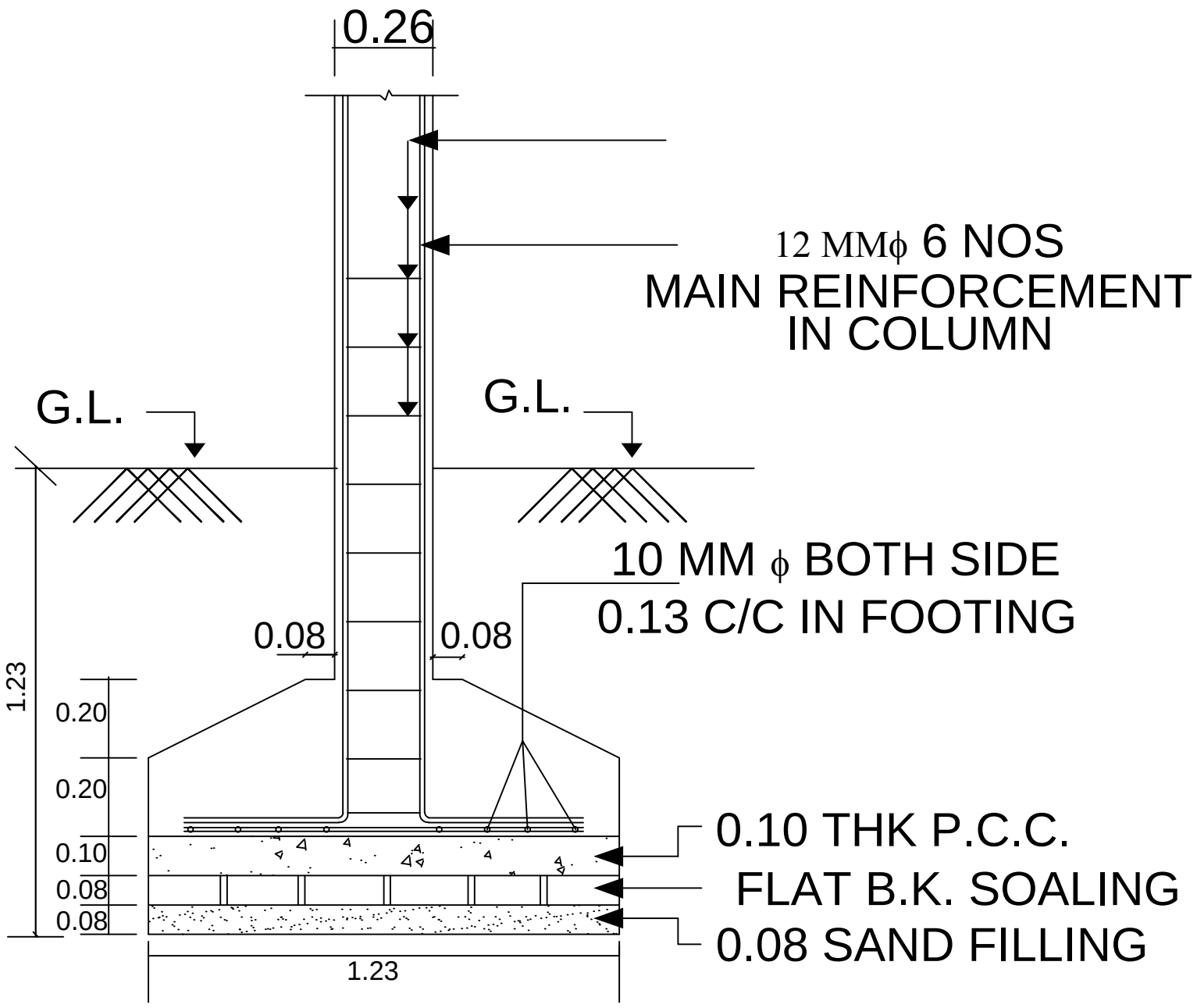

R.C.C. COLUMN FDN.DETAIL

SCALE 1" = 4'-0"

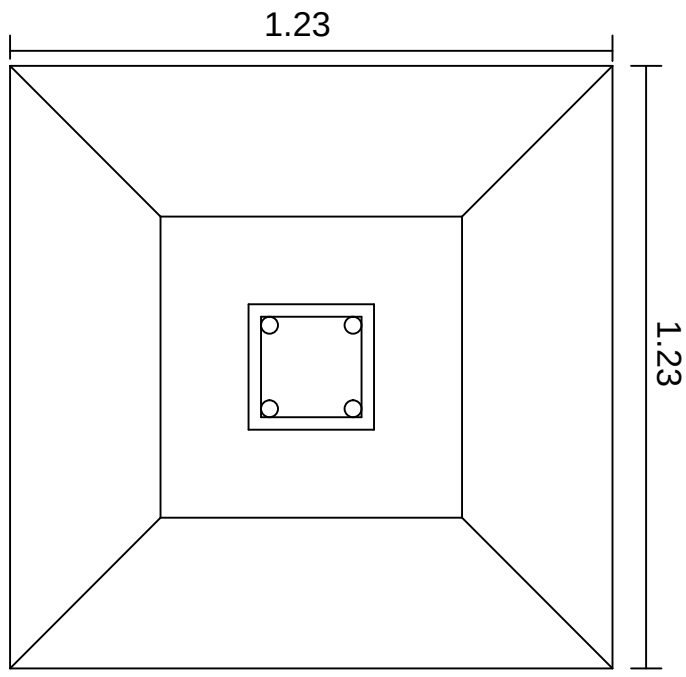

PLAN

SCALE 1" = 4'-0"

Structure Detail