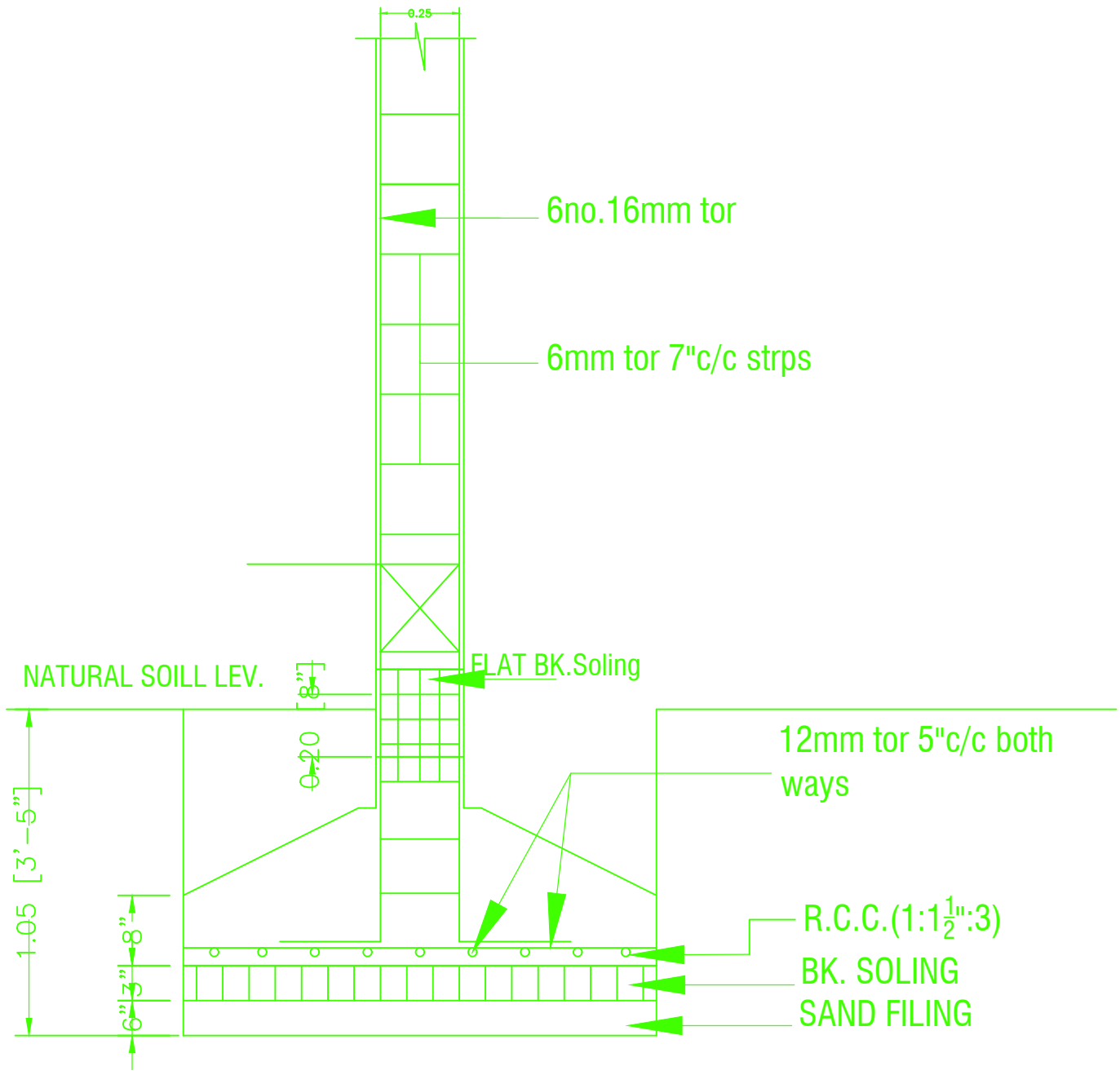

SEC. X-Y
R.C.C. COLUMN FDN.DETAIL

SCALE 1" = 2'-0"

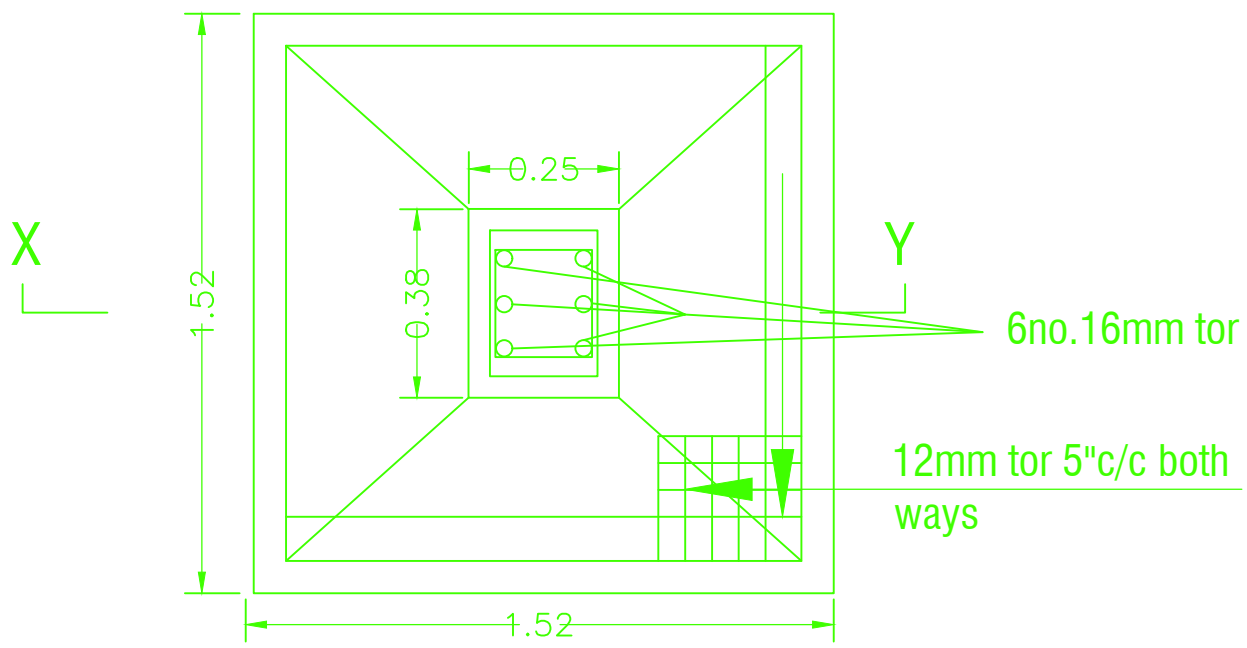

PLAN

SCALE-1":2'-0"