Project Title :SRI BALESHWAR RAM

DATE	01-04-2024
SHEET NO.	1

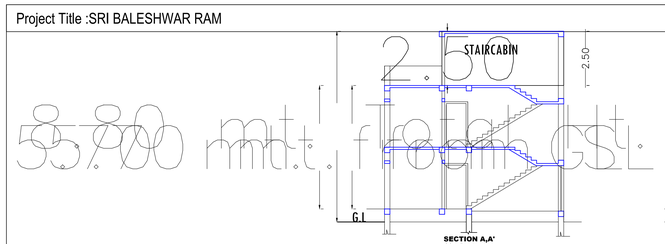

SECTION A,A'
SCALE - 1=100

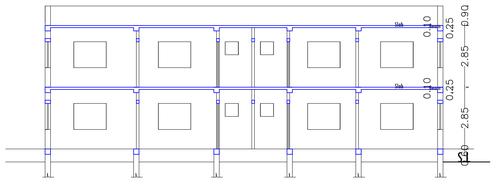

SECTION B,B'
SCALE - 1=100

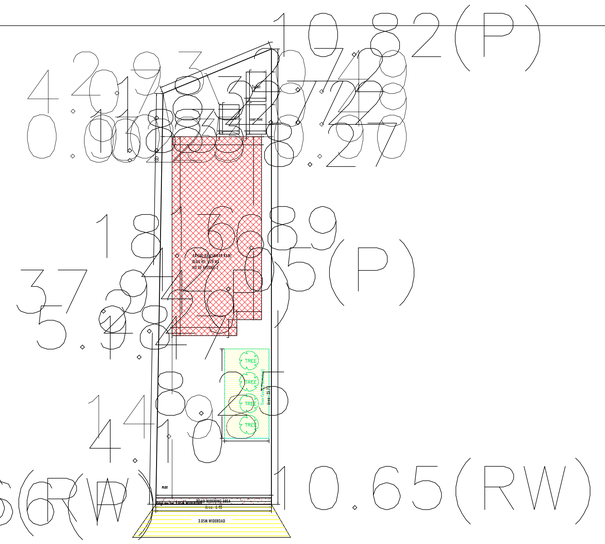

SITE PLAN

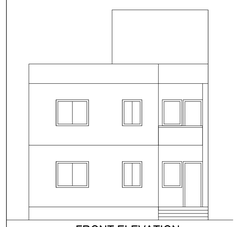

FRONT ELEVATION

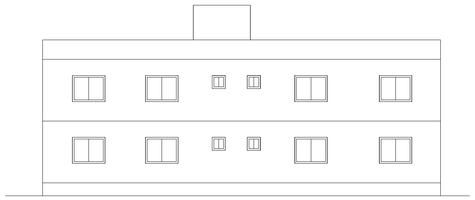

SIDE ELEVATION

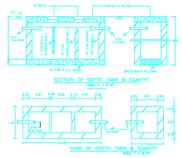

Proposal Basic Information	
Proposal File No.	JNP/BP/0033/W02/2024
Owner Name	SRI BALESHWAR RAM
Khata No	145
Plot No	3228
Village Name	Tilaiya
Use	Residential
SubUse	Bungalow/ Dwelling / Non Apartment

AREA STATEMENT JHUMRITILAIYA NAGAR PARISHAD	VERSION NO.: 1.0.69	
	VERSION DATE: 16/10/2020	
PROJECT DETAIL:		
Region: JHARKHAND URBAN LOCAL BODIES	Plot Use: Residential	
District: KODERMA	Plot SubUse: Bungalow/ Dwelling / Non Apartment	
Authority: JHUMRITILAIYA NAGAR PARISHAD	PlotNearbyReligiousStructure: NA	
Inward_No: JNP/BP/0033/W02/2024	Plot/SubPlot No: 3228	
Application Type: General Proposal	North: Plot No. - LAND OF BADRI RAM & KISHUN RAM	
Project Type: Building Permission	South: Road Width - 3.05M WIDE ROAD	
Nature of Development: New	East: Plot No. - LAND OF LAXMAN YADAV & OTHERS	
Location of Development Area: Old Area	West: Plot No. - LAND OF TODI RAM & BISHUN RAM	
AREA DETAILS:		SQ.MT.
AREA OF PLOT (Minimum)	(A)	412.53
Deduction for NetPlot Area		
Road Widening Area		6.40
Total		6.40
NET AREA OF PLOT(Gross Plot Area - Deduction from Gross Plot area)	(A-Deductions)	406.13
Deduction for Balance Plot Area(from Gross Plot Area)		
Road Widening Area		6.40
Common Plot		33.77
Total		40.17
BALANCE AREA OF PLOT(Net Plot Area - Recreational/Amenity space)	(A-Deductions)	372.36
PLOT AREA FOR COVERAGE(Net Plot Area)	(A-Deductions)	406.13
Plot Area for FAR (Net Plot Area + Road/Widening Area)	(A-Deductions)	406.13
COVERAGE CHECK		
Permissible Coverage area (60.00 %)		243.68
Proposed Coverage Area (36.57 %)		148.51
Total Prop. Coverage Area (36.57 %)		148.51
Balance coverage area (23.43 %)		95.17
FAR CHECK		
Perm. FAR Area (1.200)		487.36
Total Perm. FAR area		487.36
Residential FAR		297.03
Proposed FAR Area		297.03
Total Proposed FAR Area		297.03
Consumed FAR (Factor)		0.73
Balance FAR Area		190.33
BUILT UP AREA CHECK		
Total Proposed BuiltUp Area		297.02
ARCHITECT (Regd)		MD SHOAIB ALAM
ENGGINEER (Regd)		
SUPERVISOR (Regd)		
OWNER (Regd)		SRI BALESHWAR RAM
DEVELOPMENT AUTHORITY		LOCAL BODY

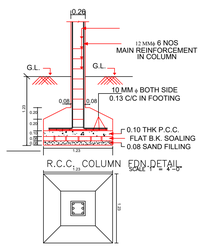

PLAN

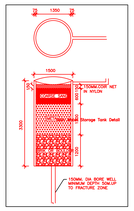

SITE KEY PLAN
NOT TO SCALE

COLOR INDEX	
PLOT BOUNDARY	
ABUTTING ROAD	
PROPOSED CONSTRUCTION	
COMMON PLOT	
ROAD WIDENING AREA	
EXISTING (To be retained)	
EXISTING (To be demolished)	

Buildingwise Floor FAR Details

Floor Name	Building Name AA (SRI BALESHWAR RAM)		Total	
	Proposed Built Up Area (Sq.mt.)	Proposed FAR Area (Sq.mt.)	Total Proposed Built Up Area (Sq.mt.)	Total FAR Area (Sq.mt.)
Ground Floor	148.51	148.51	148.51	148.51
First Floor	148.51	148.51	148.51	148.51
Terrace Floor	0.00	0.00	0.00	0.00
Total :	297.02	297.02	297.02	297.02

Building USE/SUBUSE Details

Building Name	Building Use	Building SubUse	Building Structure
AA (SRI BALESHWAR RAM)	Residential	Bungalow/ Dwelling / Non Apartment	Non-Highrise

FAR & Tenement Details (Table 4c-1)

Building	No. of Same Bldg	Total Built Up Area (Sq.mt.)	Proposed FAR Area (Sq.mt.) Resi.	Total FAR Area (Sq.mt.)	Total Consumed Additional FAR Area (Sq.mt.)	Tnmt (No.)
AA (SRI BALESHWAR RAM)	1	297.02	297.02	297.02	297.02	01
Grand Total :	1	297.02	297.02	297.02	297.02	01

Building :AA (SRI BALESHWAR RAM)

Floor Name	Total Built Up Area (Sq.mt.)	Proposed FAR Area (Sq.mt.) Resi.	Total FAR Area (Sq.mt.)	Total Consumed Additional FAR Area (Sq.mt.)	Tnmt (No.)
Ground Floor	148.51	148.51	148.51	148.51	01
First Floor	148.51	148.51	148.51	148.51	00
Terrace Floor	0.00	0.00	0.00	0.00	00
Total :	297.02	297.02	297.02	297.02	01
Total Number of Same Buildings :	1				
Total :	297.02	297.02	297.02	297.02	01

SCHEDULE OF DOOR:

BUILDING NAME	NAME	LENGTH	HEIGHT	NOS
AA (SRI BALESHWAR RAM)	D2	0.75	2.10	04
AA (SRI BALESHWAR RAM)	D1	0.90	2.10	04
AA (SRI BALESHWAR RAM)	D	1.00	2.10	12

SCHEDULE OF WINDOW/VENTILATION:

BUILDING NAME	NAME	LENGTH	HEIGHT	NOS
AA (SRI BALESHWAR RAM)	V	0.60	0.60	04
AA (SRI BALESHWAR RAM)	W1	0.90	1.20	04
AA (SRI BALESHWAR RAM)	W	1.50	1.20	18

UnitBUA Table for Building :AA (SRI BALESHWAR RAM)

FLOOR	Name	UnitBUA Type	UnitBUA Area	Carpet Area	No. of Rooms	No. of Tenement
GROUND FLOOR PLAN	SPLIT FLAT A	FLAT	246.26	244.86	11	1
FIRST FLOOR PLAN	SPLIT FLAT A	FLAT	0.00	0.00	11	0
Total:	-	-	246.26	244.86	22	1

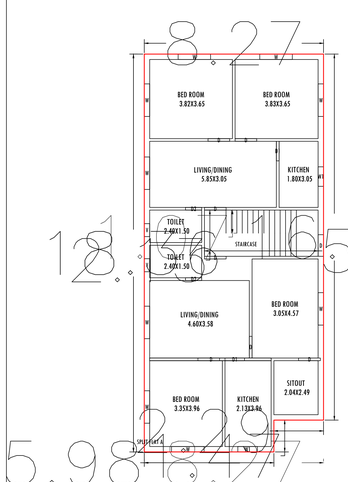

GROUND FLOOR PLAN
(Proposed)
(SCALE 1:100)

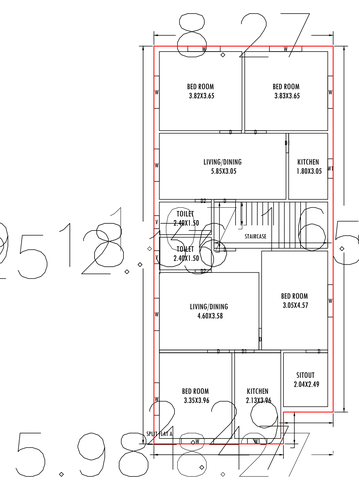

FIRST FLOOR PLAN
(Proposed)
(SCALE 1:100)

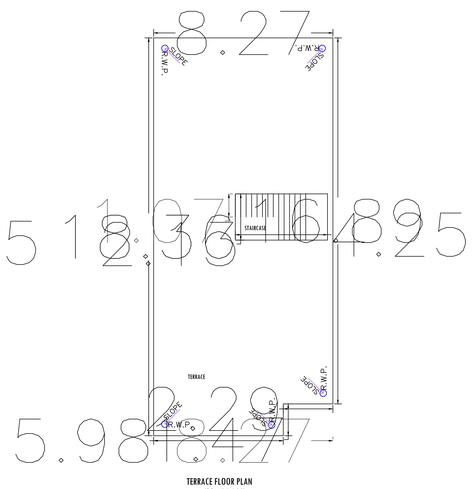

TERRACE FLOOR PLAN
(SCALE 1:100)

LTP NAME AND SIGNATURE	STRUCTURAL ENG'S NAME AND SIGNATURE	BUILDER NAME AND SIGNATURE	DIGITAL SIGNATURE
MD SHOAIB ALAM JNP/ENG/0001/2017			

ISO_A0_(841.00_x_1189.00_MM)

This is system generated MAP. No need to Physically Signed.