Project Title :SRI JAYANT KUMAR SINGH

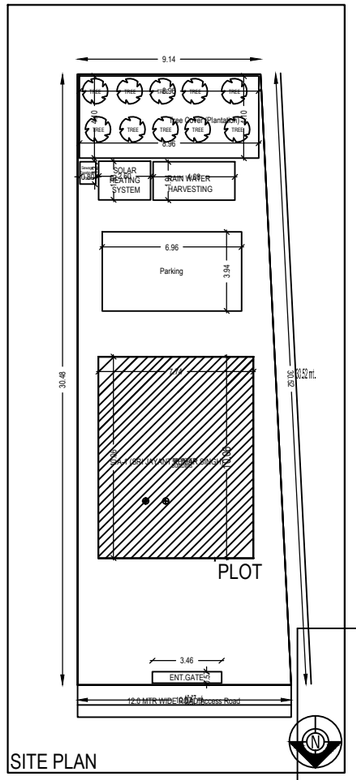

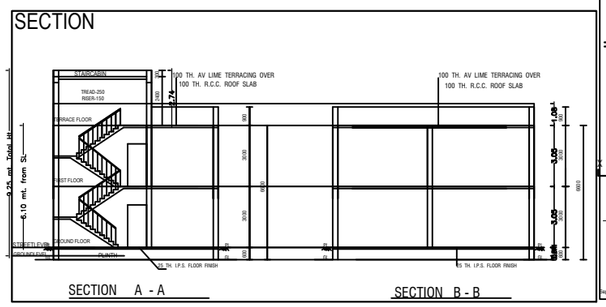

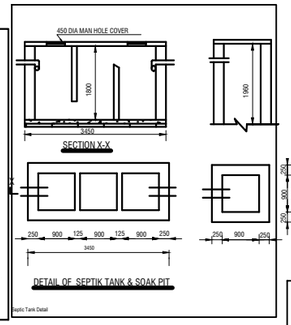

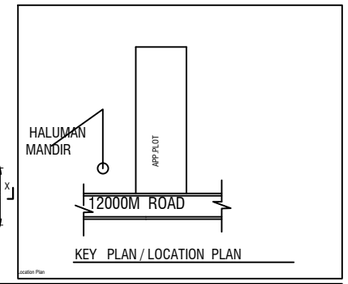

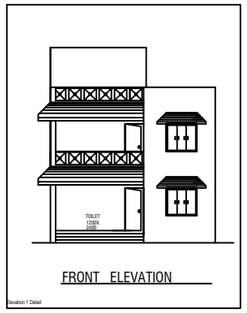

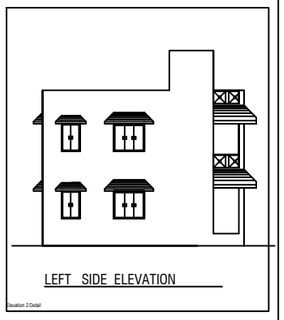

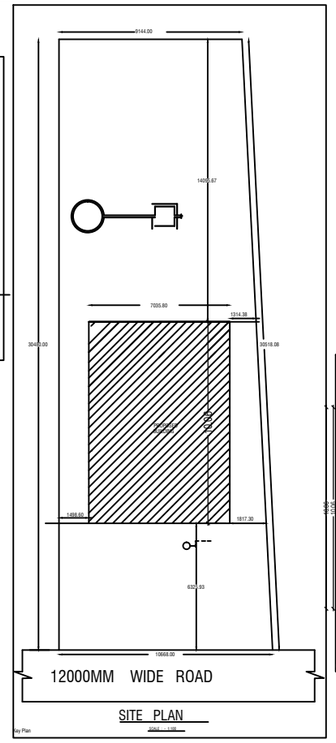

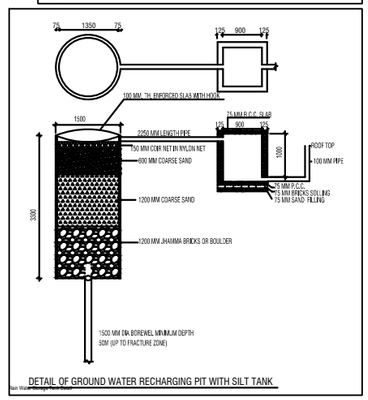

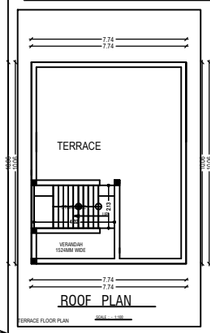

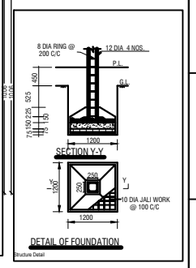

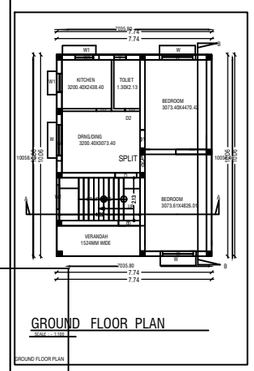

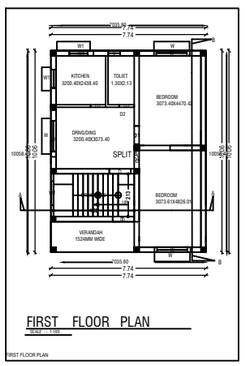

A (SRI JAYANT KUMAR SINGH)

SPECIFICATION

FOUNDATION : SHOWN IN DETAIL OF FOOTING & COLUMN
FLOOR : - 25 TH. FLOOR FINISH OVER 75 TH. P.C.C.
D.P.C. : - 25 TH. D.P.C. AT PLINTH LVL IN C.M.
LINTEL : - 150 TH. R.C.C. LINTEL IN C.C. (1:2:4)
ROOF : - 100 TH. R.C.C. ROOF SLAB IN C.C. (1:2:4)
SUPER STRUCTURE : - 250 TH. OR 125 TH. 1 ST CLASS
BRICK WORK IN CEMENT MORTAR (1:6)
PLASTER : - 12 TH. CEMENT PLASTER INTERNAL & EXTERNAL
SURFACE OF THE WALL (1:6) 6 TH. FOR CEILLING (1:4)
WOOD WORK : - SAL WOOD CHAUCHAT & VIJA WOOD SHUTTER
SEWERAGE DISPOSAL : - THROUGH SEPTIC TANK
FINISHING : - 2 COAT OF WHITE WASH SNOWSEM WASH.

SCHEDULE OF DOORS&WINDOWS

S.L. NO.	ITEM		WIDTH	HEIGHT	SILL. LVL
1.	DOORS	D	1050	2100	0
		D1	900	2100	0
		D2	750	2100	0
2.	WINDOWS	W	1500	1350	750
		W1	900	1350	750
		W2	900	1200	900
3.	VENTILATOR	V	750	600	1500
4.	GLAZING	G	600	1800	750

AREA STATEMENT

PLOT AREA — 302.04 M^2

GROUND FLOOR AREA — 70.79 M^2
FIRST FLOOR AREA — 70.79 M^2
TOTAL — 141.58 M^2
F.A.R. - 0.47
% OF COVERED AREA — 23.44 %

PROPOSED RESIDENTIAL BUILDING OF
SRI JAYANT KUMAR SINGH S/O SURENDRA
PAL SINGH VILLAGE -GUMLA ROAD BID .
PLOT NO-1255 ,KHATA NO- 361 .
THANA NO- 194 .WARD NO -18 .
THANA - & DIST LOHARDAGA .

SIGN. OF APPLICANT | SIGN. OF LIC./ENGG.

AREA STATEMENT: LOHARDAGA NAGAR PARISHAD	VERSION NO.: 1.0.16
	VERSION DATE: 30/06/2018
PROJECT DETAIL :	
Inward_No : -	Plot Use : Residential
Region : JHARKHAND URBAN LOCAL BODIES	Plot SubUse : Residential Bldg/Apartment
District : LOHARDAGA	Land Use Zone : NA
Application Type : General Proposal	Abutting Road Width : -
Project Type : Building Permission	Plot No. : -
Nature of Development : New	Revenue Survey No/Survey No : -
Location : Old Area	Thana No : -
Sub Location : NA	Holding No : -
Village/Mauza Name : -	Khata No : -
Ward No : -	North : -
Road/Street :	South : -
	East : -
	West : -

AREA DETAILS :		SQ.MT.
AREA OF PLOT (Minimum)	(A)	301.93
Net Plot Area (Gross Plot Area - Deduction from Gross Plot area)	(A-Deductions)	301.93
Deductions for Balance Plot Area (from Gross Plot Area) :		
COP Area		36.71
Total :		36.71
Balance Plot Area (Net Plot Area - Recreational/Amenity space)	(A-Deductions)	265.22
Plot Area for Coverage (Net Plot Area)	(A-Deductions)	301.93
Plot Area for FSI (Net Plot Area + Road Widening Area)	(A-Deductions)	301.93
Accessory Use Area		0.00
COVERAGE CHECK		
Proposed Coverage Area (25.77 %)		77.81
Total Coverage Area (25.77 %)		77.81
FAR CHECK		
Proposed Area of FAR		155.62
Total Area of FAR		155.62
BUILT UP AREA CHECK		
Total Proposed BuiltUp Area		155.62

ARCH / ENGG / SUPERVISOR (Regd)	OWNER
DEVELOPMENT AUTHORITY	LOCAL BODY

COLOR INDEX

- PLOT BOUNDARY
- ABUTTING ROAD
- PROPOSED WORK (COVERAGE AREA)
- EXISTING (To be retained)
- EXISTING (To be demolished)

Color Index:
PARKING CALCULATION:

Parking Type	Prop No.	Prop Area
Other Parking	1	27.45
Total Area	1	27.45

MARGIN DETAIL:

Building / Wing Name	Road Name	Front Margin	Rear Margin	Side1 Margin	Side2 Margin
A1 (SRI JAYANT KUMAR SINGH)	12.0 MTR WIDE ROAD Access Road	6.33	14.10	1.05	1.06

FAR & Tenement Details (Table 4c-1)

Building	No. of Same Bldg	Total Built Up Area (Sq.mt.)	Proposed FAR Area (Sq.mt.) Resi.	Total FAR Area (Sq.mt.)	Tnmt (No.)
A (SRI JAYANT KUMAR SINGH)	1	155.62	155.62	155.62	01
Grand Total :	1	155.62	155.62	155.62	01

Building :A (SRI JAYANT KUMAR SINGH)

Floor Name	Total Built Up Area (Sq.mt.)	Proposed FAR Area (Sq.mt.) Resi.	Total FAR Area (Sq.mt.)	Tnmt (No.)
Ground Floor...	77.81	77.81	77.81	01
First Floor...	77.81	77.81	77.81	00
Terrace Floor...	0.00	0.00	0.00	00
Total :	155.62	155.62	155.62	01
Total Number of Same Buildings :	1			
Total :	155.62	155.62	155.62	01

SCHEDULE OF JOINERY:

BUILDING NAME	NAME	LENGTH	HEIGHT	NOS
A (SRI JAYANT KUMAR SINGH)	D2	0.75	2.13	04
A (SRI JAYANT KUMAR SINGH)	D1	0.91	2.13	04
A (SRI JAYANT KUMAR SINGH)	D	1.07	2.13	04
Total :	-	-	-	12

SCHEDULE OF JOINERY:

BUILDING NAME	NAME	LENGTH	HEIGHT	NOS
A (SRI JAYANT KUMAR SINGH)	V	0.60	1.00	02
A (SRI JAYANT KUMAR SINGH)	W2	1.20	2.70	02
A (SRI JAYANT KUMAR SINGH)	W1	1.20	2.70	02
A (SRI JAYANT KUMAR SINGH)	W	1.80	2.70	06
Total :				12

UnitBUA Table for Building :A (SRI JAYANT KUMAR SINGH)

FLOOR	Name	UnitBUA Type	UnitBUA Area	Carpet Area	No. of Rooms	No. of Tenement
GROUND FLOOR PLAN	SPLIT A	FLAT	118.86	118.08	6	1
TOTAL :	-	-	118.86	118.08	12	1