Project Title :SATISH KUMAR AGRAWAL

DATE	28-06-2019
SHEET NO.	1
	-

Building USE/SUBUSE Details

Building Name	Building Use	Building SubUse	Building Structure
A (SATISH KUMAR AGRAWAL)	Residential	Bungalow/ Dwelling / Non Apartment	Non-Highrise

COLOR INDEX
PLOT BOUNDARY
ABUTTING ROAD
PROPOSED CONSTRUCTION
COMMON PLOT
ROAD WIDENING AREA
EXISTING (To be retained)
EXISTING (To be demolished)

Buildingwise Floor FAR Details

Floor Name	Building Name A (SATISH KUMAR AGRAWAL) Proposed Built Up Area (Sq.mt.)	Proposed FAR Area (Sq.mt.)	Total: Total Proposed Built Up Area (Sq.mt.)	Total FAR Area (Sq.mt.)
Ground Floor	38.84	38.84	38.84	38.84
First Floor	38.84	38.84	38.84	38.84
Terrace Floor	0.00	0.00	0.00	0.00
Total :	77.68	77.68	77.68	77.68

UnitBUA Table for Building :A (SATISH KUMAR AGRAWAL)

FLOOR	Name	UnitBUA Type	UnitBUA Area	Carpet Area	No. of Rooms	No. of Tenement
GROUND FLOOR PLAN	SPLIT A	FLAT	47.20	46.97	2	1
FIRST FLOOR PLAN	SPLIT A	FLAT	0.00	0.00	2	0
Total:	-	-	47.20	46.97	4	1

Proposal Basic Information

Proposal File No.	LNP/BP/0024/W15/2019
Owner Name	SATISH KUMAR AGRAWAL
Khata No	146
Plot No	368/3101
Village Name	Lohardaga
Use	Residential
SubUse	Bungalow/ Dwelling / Non Apartment

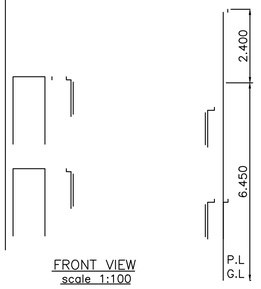

FRONT VIEW
scale 1:100

KEY PLAN
scale Not Mention

4M DIA.HOLE TO BE DRILLED IN RECHARGE PIT DOWN TO A MINIMUM DEPTH OF 15 M

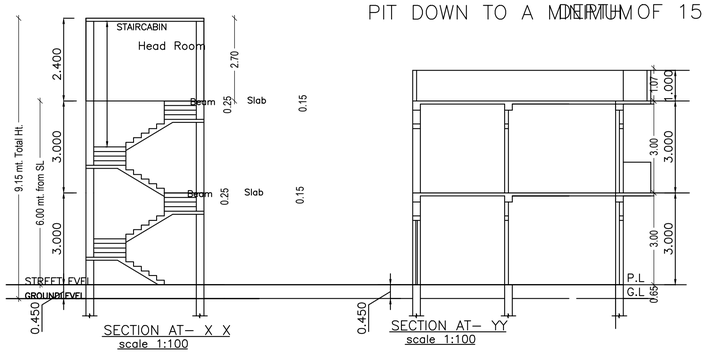

SECTION AT– X X
scale 1:100

SECTION AT– YY
scale 1:100

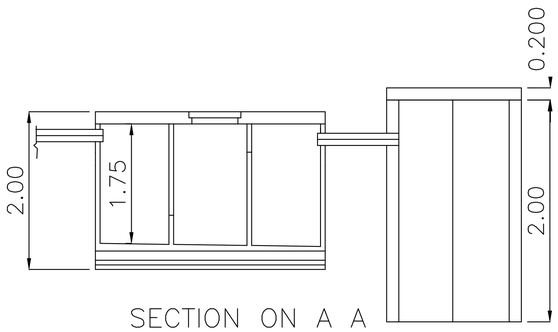

SECTION ON A A

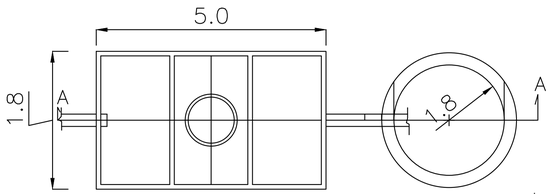

PLAN OF SEPTIC TANK AND SOAK PIT
SCALE–1:100

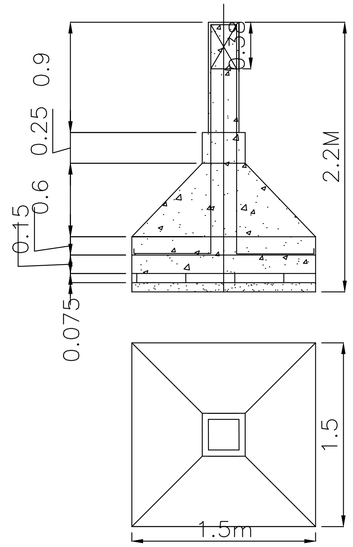

TYP FOUNDATION DET
SCALE 1:50

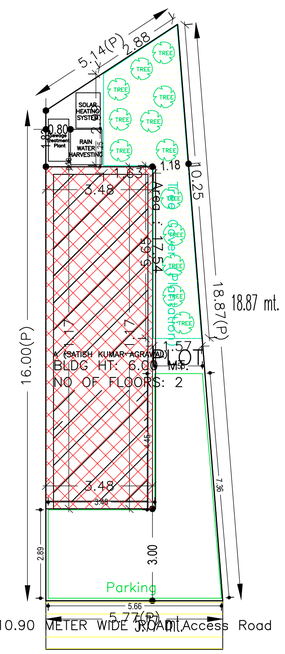

SITE PLAN

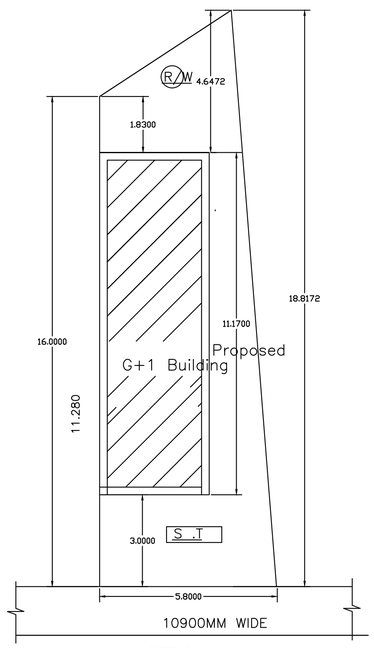

SITE PLAN
scale 1:100

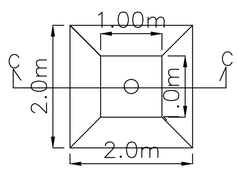

PLANSCALE – 1: 100

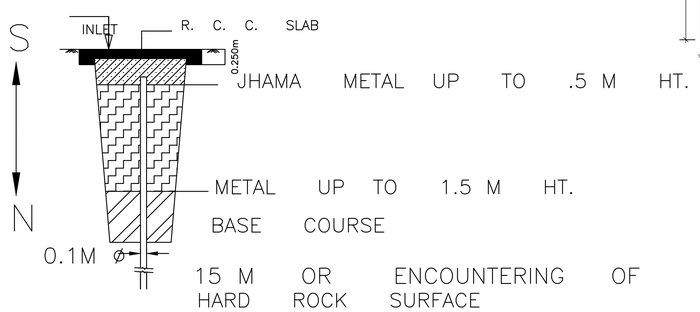

SECTION C C
SCALE – 1: 100

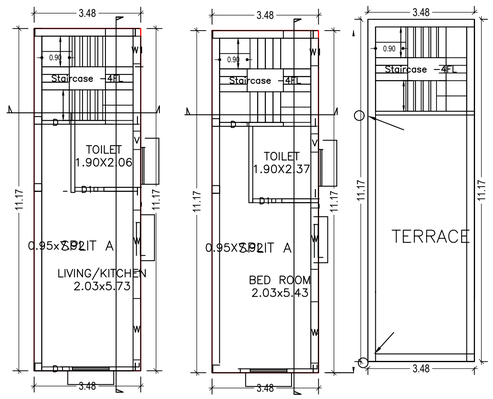

GROUND FLOOR PLAN (Proposed) (SCALE 1:100)

FIRST FLOOR PLAN (Proposed) (SCALE 1:100)

TERRACE FLOOR PLAN (SCALE 1:100)

AREA STATEMENT LOHARDAGA NAGAR PARISHAD	VERSION NO.: 1.0.37	
	VERSION DATE: 29/04/2019	
PROJECT DETAIL:		
Region: JHARKHAND URBAN LOCAL BODIES	Plot Use: Residential	
District: LOHARDAGA	Plot SubUse: Bungalow/ Dwelling / Non Apartment	
Authority: LOHARDAGA NAGAR PARISHAD	PlotNearbyReligiousStructure: NA	
Inward_No: LNP/BP/0024/W15/2019	Plot/SubPlot No: 368/3101	
Application Type: General Proposal	North: -	
Project Type: Building Permission	South: -	
Nature of Development: New	East: -	
Location of Development Area: Old Area	West: -	
AREA DETAILS:		SQ.MT.
AREA OF PLOT (Minimum)	(A)	88.73
NET AREA OF PLOT(Gross Plot Area - Deduction from Gross Plot area)	(A-Deductions)	88.73
Deduction for Balance Plot Area(from Gross Plot Area)		
Common Plot		17.54
Total		17.54
BALANCE AREA OF PLOT(Net Plot Area - Recreational/Amenity space)	(A-Deductions)	71.19
PLOT AREA FOR COVERAGE(Net Plot Area)	(A-Deductions)	88.73
Plot Area for FAR (Net Plot Area + Road/Widening Area)	(A-Deductions)	88.73
COVERAGE CHECK		
Permissible Coverage area (70.00 %)		62.11
Proposed Coverage Area (43.77 %)		38.84
Total Prop. Coverage Area (43.77 %)		38.84
Balance coverage area (26.23 %)		23.27
FAR CHECK		
Perm. FAR Area (2.00)		177.46
Total Perm. FAR area		177.46
Residential FAR		77.68
Proposed FAR Area		77.68
Total Proposed FAR Area		77.68
Consumed FAR (Factor)		0.88
Balance FAR Area		99.78
BUILT UP AREA CHECK		
Total Proposed BuiltUp Area		77.68
ARCHITECT (Regd)		SUNIL KUMAR
ENGGINEER (Regd)		
SUPERVISOR (Regd)		
OWNER (Regd)		SATISH KUMAR AGRAWAL
DEVELOPMENT AUTHORITY		LOCAL BODY

SCHEDULE OF DOOR:

BUILDING NAME	NAME	LENGTH	HEIGHT	NOS
A (SATISH KUMAR AGRAWAL)	D1	0.75	2.13	02
A (SATISH KUMAR AGRAWAL)	D	0.90	2.13	03

SCHEDULE OF WINDOW/VENTILATION:

BUILDING NAME	NAME	LENGTH	HEIGHT	NOS
A (SATISH KUMAR AGRAWAL)	V	0.60	2.70	02
A (SATISH KUMAR AGRAWAL)	W1	0.90	2.70	02
A (SATISH KUMAR AGRAWAL)	W	2.00	2.70	04

Building :A (SATISH KUMAR AGRAWAL)

Floor Name	Total Built Up Area (Sq.mt.)	Proposed FAR Area (Sq.mt.) Resi.	Total FAR Area (Sq.mt.)	Total Consumed Additional FAR Area (Sq.mt.)	Tnmt (No.)
Ground Floor	38.84	38.84	38.84	38.84	01
First Floor	38.84	38.84	38.84	38.84	00
Terrace Floor	0.00	0.00	0.00	0.00	00
Total :	77.68	77.68	77.68	77.68	01
Total Number of Same Buildings :	1				
Total :	77.68	77.68	77.68	77.68	01

FAR & Tenement Details (Table 4c–1)

Building	No. of Same Bldg	Total Built Up Area (Sq.mt.)	Proposed FAR Area (Sq.mt.) Resi.	Total FAR Area (Sq.mt.)	Total Consumed Additional FAR Area (Sq.mt.)	Tnmt (No.)
A (SATISH KUMAR AGRAWAL)	1	77.68	77.68	77.68	77.68	01
Grand Total :	1	77.68	77.68	77.68	77.68	01

LTP NAME AND SIGNATURE	STRUCTURAL ENG'S NAME AND SIGNATURE	BUILDER NAME AND SIGNATURE	DIGITAL SIGNATURE
SUNIL KUMAR LNP/ENG/0004/2017			

ISO_A1_(841.00_x_594.00_MM)

This is system generated MAP. No need to Physically Signed.