Project Title :KANCHAN SAHU

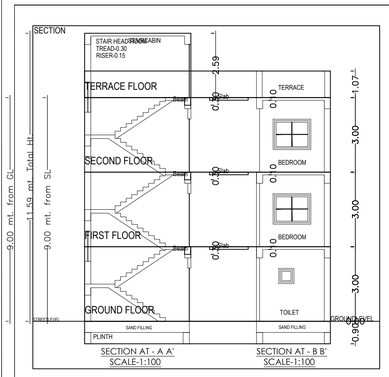

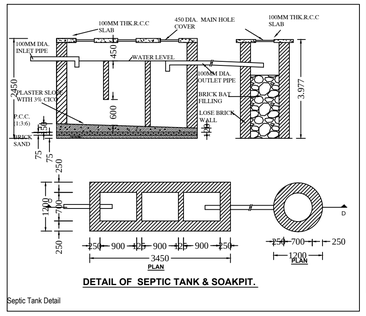

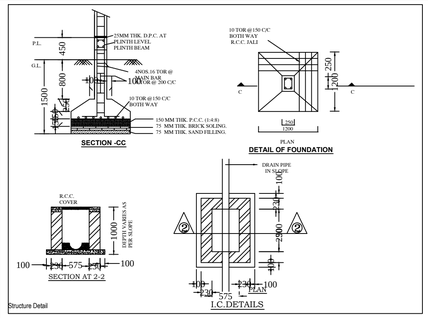

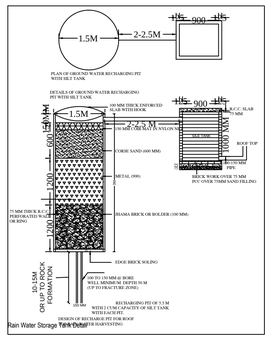

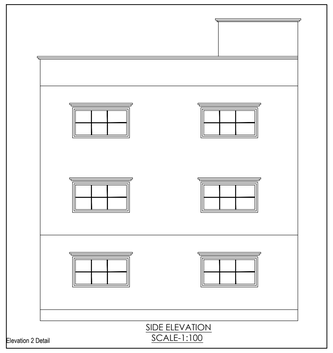

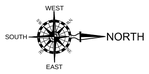

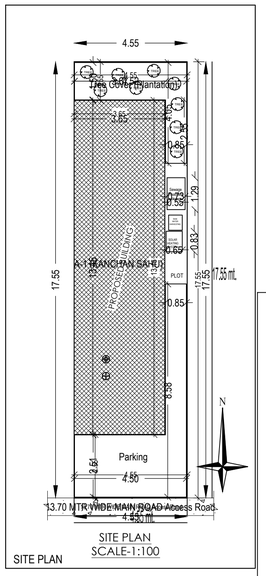

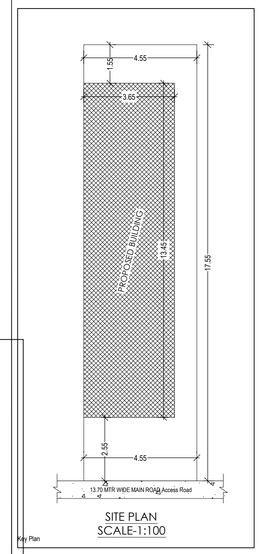

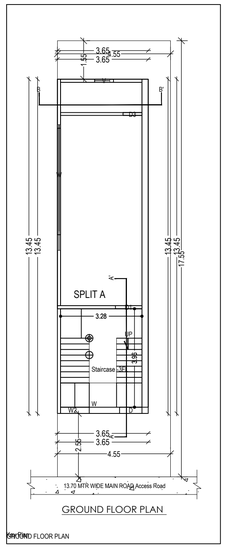

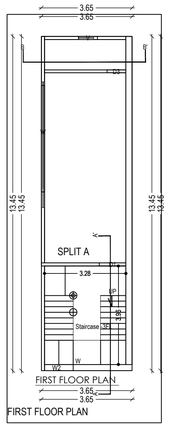

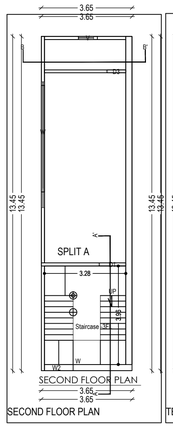

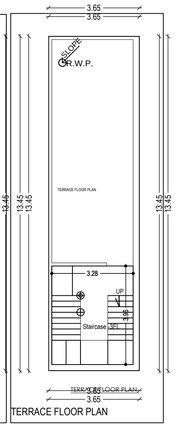

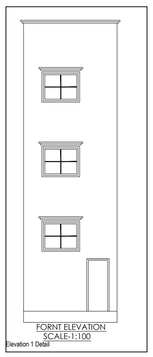

LAND DETAILS

PROPOSED RESIDENTIAL BUILDING PLAN OF

KANCHAN SAHU

W/O MR. BAIJNATH SAHU

PLOT NO. - 986 & 973 ,
KHATA NO.- 147 & 192
VILLAGE - KATMU, LOHARDAGA
WARD NO-5
THANA NO - 141
DISTRICT. - WEST SINGHBHUM
STATE -- JHARKHAND.

Applicant's Signature.	SIGNATURE OF LIC. ENGINEER

AREA STATEMENT: LOHARDAGA NAGAR PARISHAD	VERSION NO.: 1.0.26
	VERSION DATE: 16/10/2020
PROJECT DETAIL :	
Inward_No. : -	Plot Use : Residential
Region : JHARKHAND URBAN LOCAL BODIES	Plot SubUse : Bungalow/ Dwelling / Non Apartment
District : LOHARDAGA	Land Use Zone : NA
Application Type : General Proposal	Abutting Road Width : -
Project Type : Building Permission	Plot No. : -
Nature of Development : New	Revenue Survey No/Survey No : -
Location : Old Area	Thana No : -
Sub Location : NA	Holding No : -
Village/Mauza Name : -	Khata No : -
Ward No : -	North : -
Road/Street : -	South : -
	East : -
	West : -

AREA DETAILS :		SQ.MT.
AREA OF PLOT (Minimum)	(A)	79.85
Net Plot Area (Gross Plot Area - Deduction from Gross Plot area)	(A-Deductions)	79.85
Deductions for Balance Plot Area (from Gross Plot Area)		
COP Area		8.95
Total		8.95
Balance Plot Area (Net Plot Area - Recreational/Amenity space)	(A-Deductions)	70.90
Plot Area for Coverage (Net Plot Area)	(A-Deductions)	79.85
Plot Area for FSI (Net Plot Area + Road/Widening Area)	(A-Deductions)	79.85
Accessory/Use Area		0.93
COVERAGE CHECK		
Proposed Coverage Area (61.48 %)		49.09
Total Coverage Area (61.48 %)		49.09
FAR CHECK		
Proposed Area of FAR		147.27
Total Area of FAR		147.27
BUILT UP AREA CHECK		
Total Proposed BuiltUp Area		147.27

ARCH / ENGG / SUPERVISOR (Regd)	OWNER
DEVELOPMENT AUTHORITY	LOCAL BODY

COLOR INDEX

- PLOT BOUNDARY
- ABUTTING ROAD
- PROPOSED WORK (COVERAGE AREA)
- EXISTING (To be retained)
- EXISTING (To be demolished)

Color Index:

PARKING CALCULATION:

Parking Type	Prop No.	Prop Area
Other Parking	1	16.43
Total Area	1	16.43

MARGIN DETAIL:

Building / Wing Name	Road Name	Front Margin	Rear Margin	Side1 Margin	Side2 Margin
A-1 (KANCHAN SAHU)	13.70 MTR WIDE MAIN ROAD Access Road	2.55	1.55	0.00	0.90

FAR & Tenement Details (Table 4c-1)

Building	No. of Same Bldg	Total Built Up Area (Sq.mt.)	Proposed FAR Area (Sq.mt.) Resi.	Total FAR Area (Sq.mt.)	Tnmt (No.)
A (KANCHAN SAHU)	1	147.27	147.27	147.27	01
Grand Total :	1	147.27	147.27	147.27	01

Building :A (KANCHAN SAHU)

Floor Name	Total Built Up Area (Sq.mt.)	Proposed FAR Area (Sq.mt.) Resi.	Total FAR Area (Sq.mt.)	Tnmt (No.)
Ground Floor...	49.09	49.09	49.09	01
First Floor...	49.09	49.09	49.09	00
Second Floor...	49.09	49.09	49.09	00
Terrace Floor...	0.00	0.00	0.00	00
Total :	147.27	147.27	147.27	01
Total Number of Same Buildings	1			
Total :	147.27	147.27	147.27	01

SCHEDULE OF JOINERY:

BUILDING NAME	NAME	LENGTH	HEIGHT	NOS
A (KANCHAN SAHU)	D3	0.76	2.13	03
A (KANCHAN SAHU)	D	0.90	2.13	01
A (KANCHAN SAHU)	D1	1.07	2.13	03
Total	-	-	-	07

SCHEDULE OF JOINERY:

BUILDING NAME	NAME	LENGTH	HEIGHT	NOS
A (KANCHAN SAHU)	V	0.76	1.00	03
A (KANCHAN SAHU)	W2	1.15	2.50	03
A (KANCHAN SAHU)	W	4.29	2.50	03
Total	-	-	-	09

UnitBUA Table for Building :A (KANCHAN SAHU)

FLOOR	Name	UnitBUA Type	UnitBUA Area	Carpet Area	No. of Rooms	No. of Tenement
GROUND FLOOR PLAN	SPLIT A	FLAT	88.30	87.17	2	1
Total	-	-	88.30	87.17	6	1