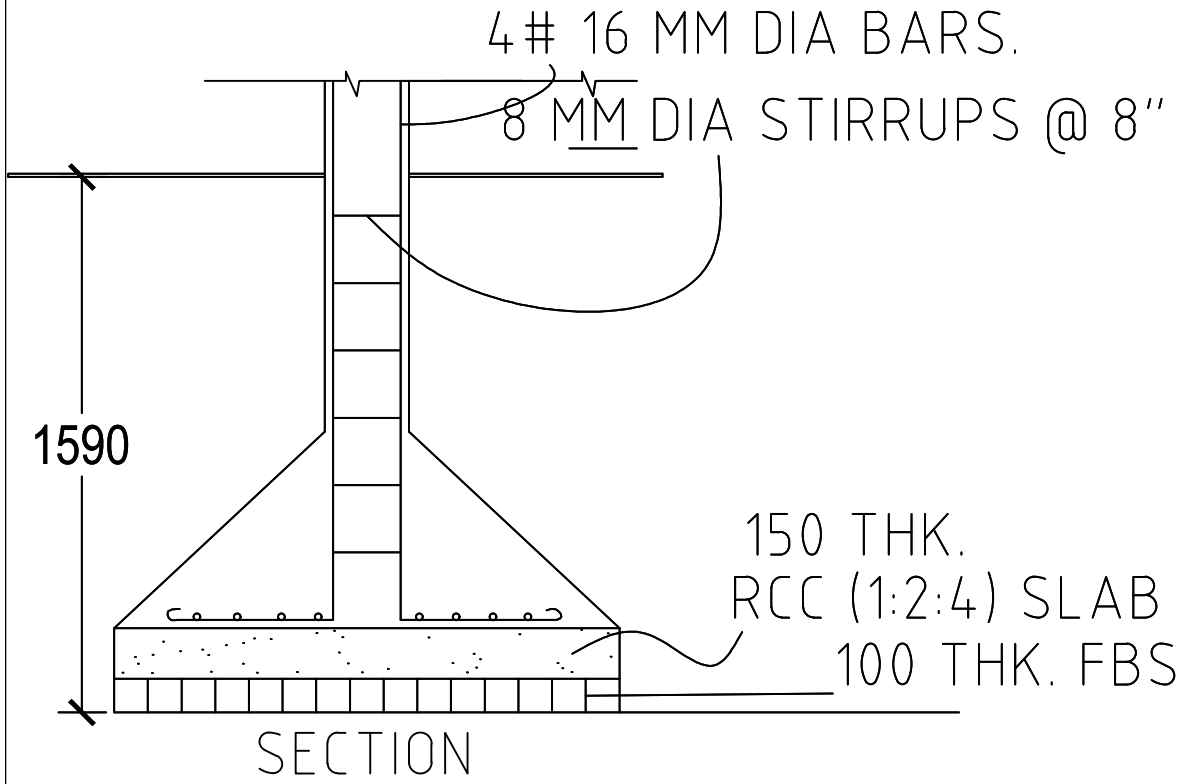

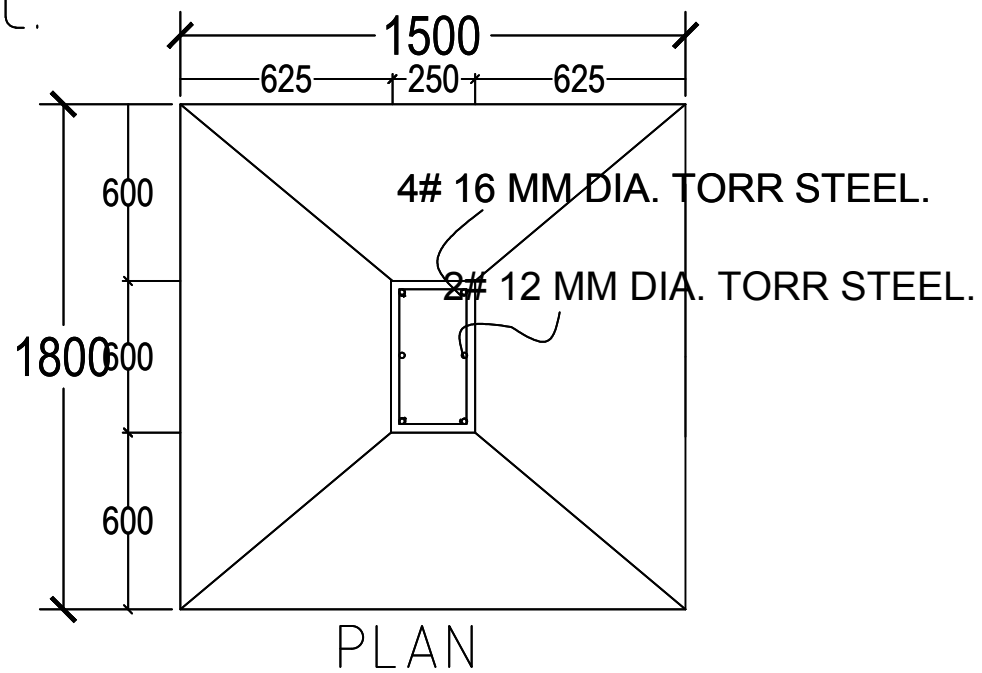

FOUNDATION DETAILS (ISOLATED R.C.C FOOTING)

FOUNDATION DETAIL

N.T.S

Structure Detail