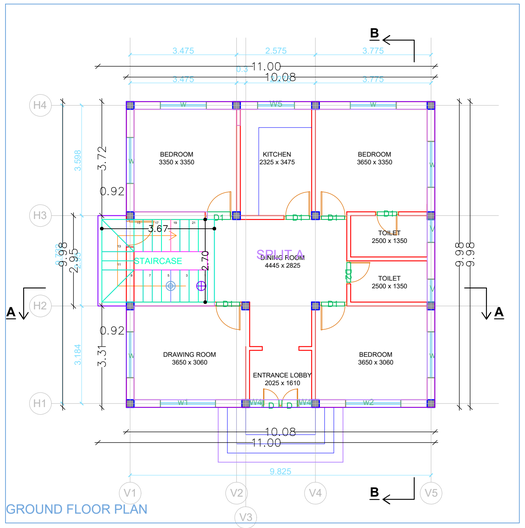

GROUND FLOOR PLAN

GROUND FLOOR

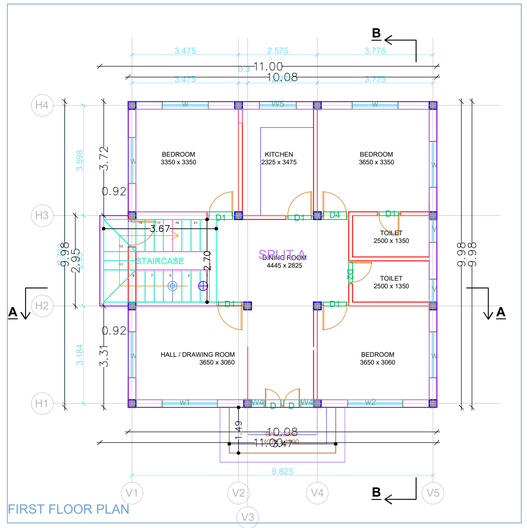

FIRST FLOOR PLAN

FIRST FLOOR

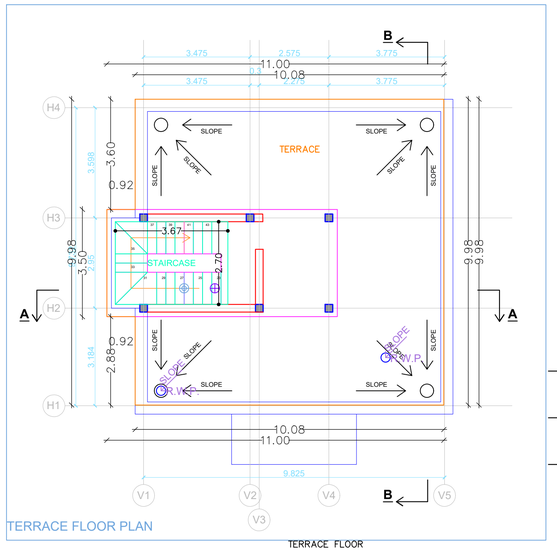

TERRACE FLOOR PLAN

TERRACE FLOOR

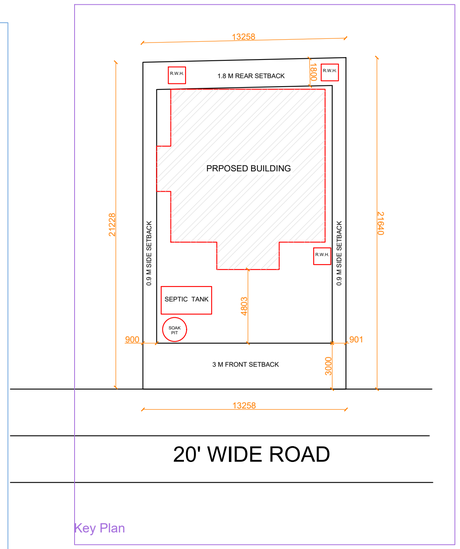

Key Plan

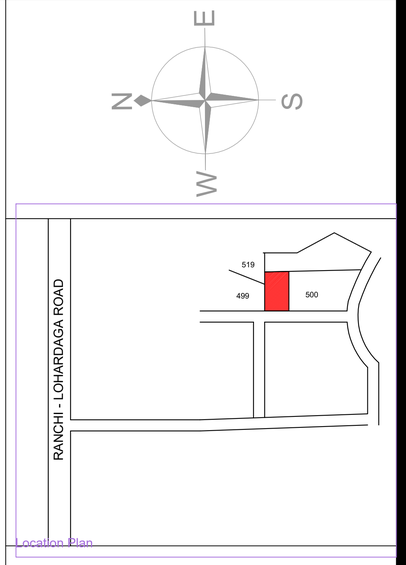

Location Plan

Elevation 1 Detail

ELEVATION FRONT

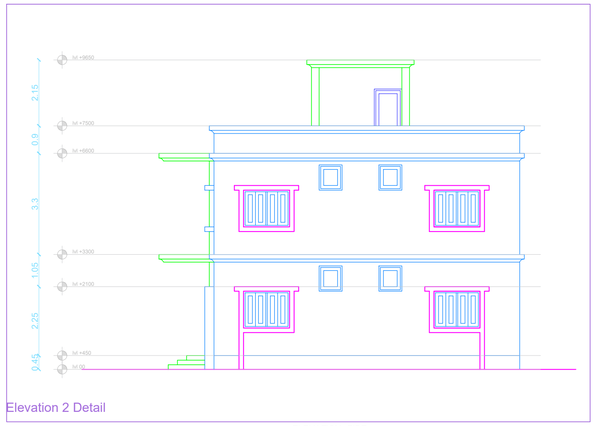

Elevation 2 Detail

ELEVATION SIDE

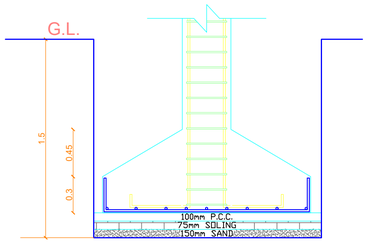

COLUMN DETAIL				
NAME	SIZE	REINFORCEMENT		
C	250 X 250	4 X 16Ø	DIA 8 @ 200mm C/C	

COLUMN DETAIL

Structure Detail

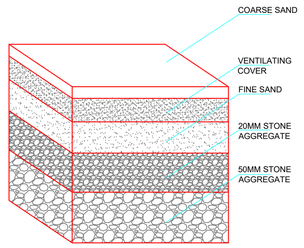

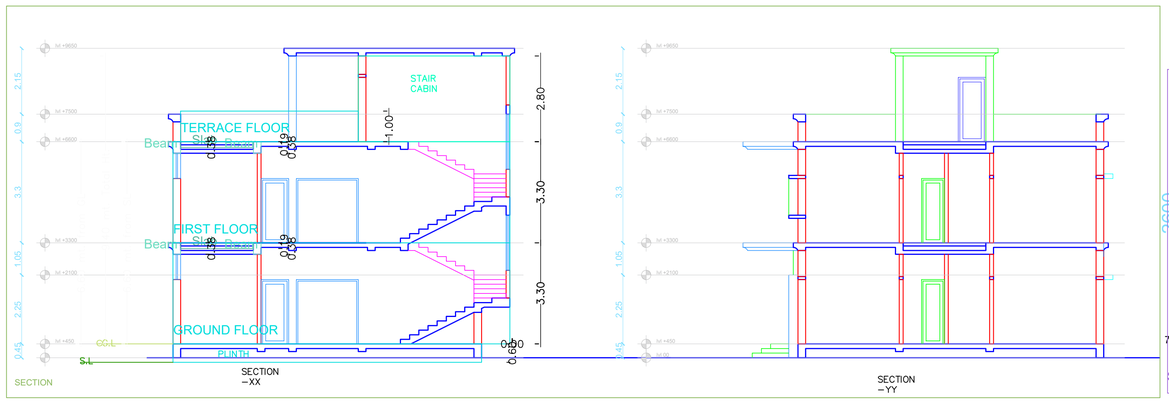

SECTION –XX

SECTION –YY

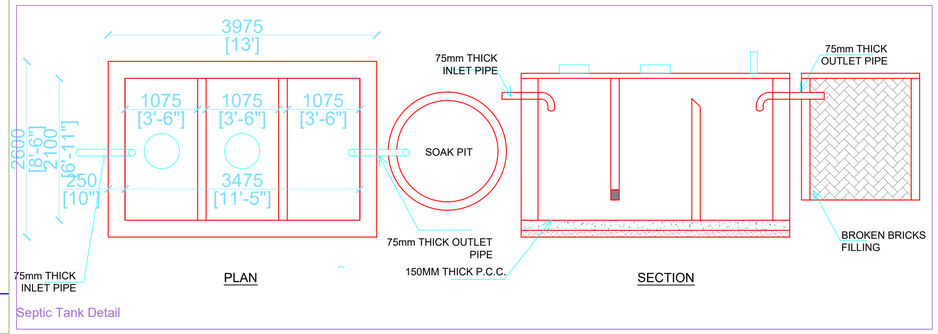

Septic Tank Detail

1.) FOUNDATION:- 150MM THICK P.C.C OVER BRICK SOLING OVER 75MM
THICK SAND FILLING

2.) BRICK WORK:- BRICK WORK IN CEMENT MORTAR WITH FIRST CLASS
BRICK

3.) LINTEL:- 150MM THICK R.C.C.LINTEL

4.)ROOFING:- 50MM THICK LIME TERRACING OVER 100MM THICK R.C.C
ROOF SLAB

5.)FLOORING:- 25MM THICK MARBLE FLOOR OVER 100MM THICK DRY
RAMMED KHOA

6.)PLASTER:- 12MM THICK CEMENT PLASTER ON INTERNAL WALLS AND
15MM THICK ON EXTERNAL WALLS OF BUILDING. EXTERIOR GRADE
PAINT ON EXTERIOR FINISH AND WASHABLE ACRYLIC DISTEMPER
OVER PUTTY ON INTERIOR FINISH.

TOTAL SITE AREA = 284.81 Sq.m (3065 Sq.ft.)

BUILT UP AREA –
110.6 Sq.m (1190 Sq.ft.) - GROUND FLOOR
110.6 Sq.m (1190 Sq.ft.) - FIRST FLOOR

221.2 Sq.m (2380 Sq.ft.) - TOTAL BUILT-UP AREA

GROUND COVERAGE
110.6 X 100 =38.8%
284.81

F.A.R. = 141.81 / 404.68 = 0.77

PROPOSED G+1 RESIDENTIAL BLOCK AT NEW ADARSH NAGAR LOHARDAGA JHARKHAND

FOR :
MRS ANITA ORAON
W/O MR RAMDHANI ORAON
PLOT NO. - PART/500/501 NEW
PART/460,459(OLD)

KHATA NO.- 140/305
THANA NO. -229

DRAWING NAME :

SUBMISSION DRAWING

SHEET NO.	SHEET SIZE	ARCHITECT:
1	A1	ASHISH DEEP TOPPO 7992304518
ALL DIMENSIONS IN MM		SCALE - AS MENTION