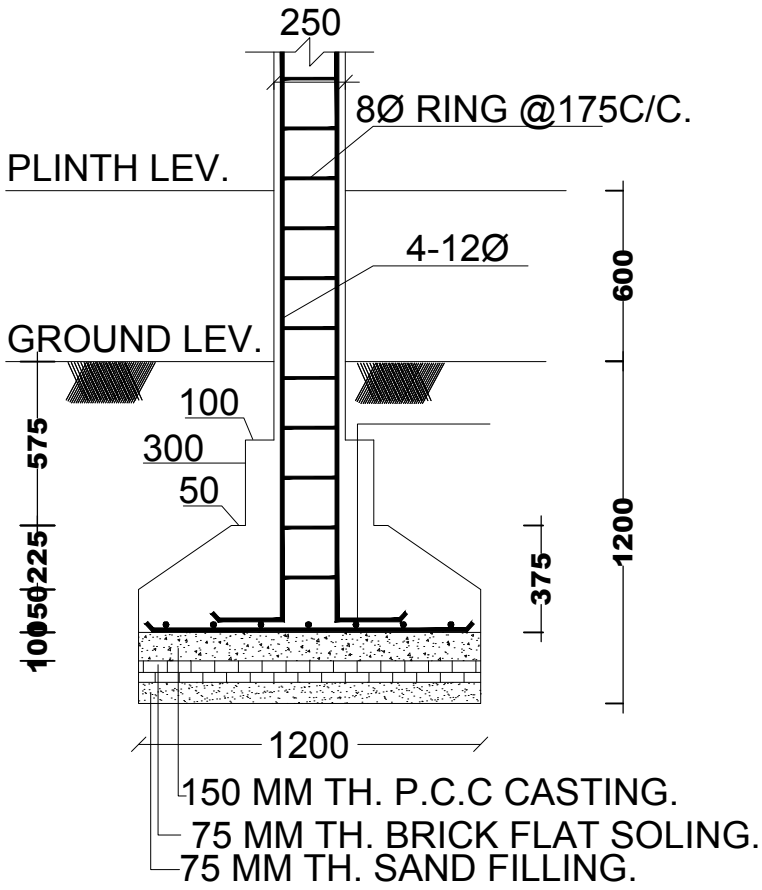


# SECTION:-(A-A)

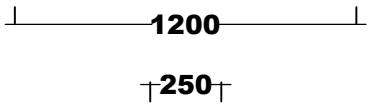


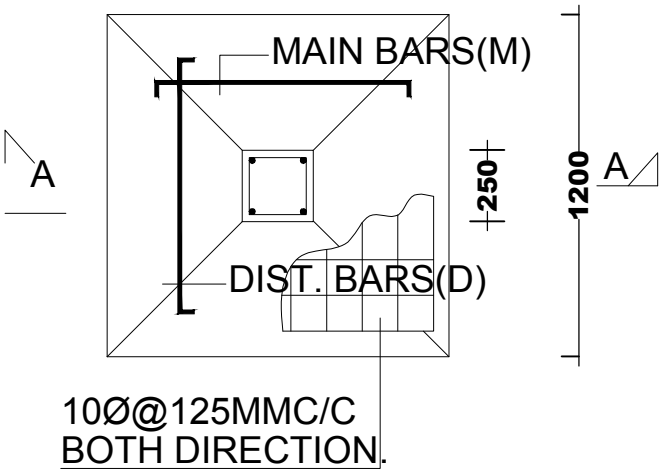


# FOUND. PLAN OF COLUMN

(SCALE -1:-100)

Structure Detail