Project Title :MR RAJU SAH

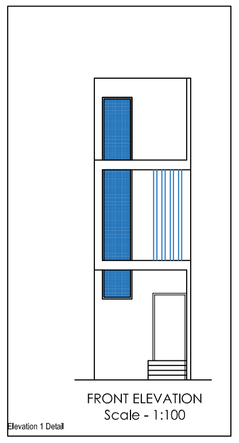

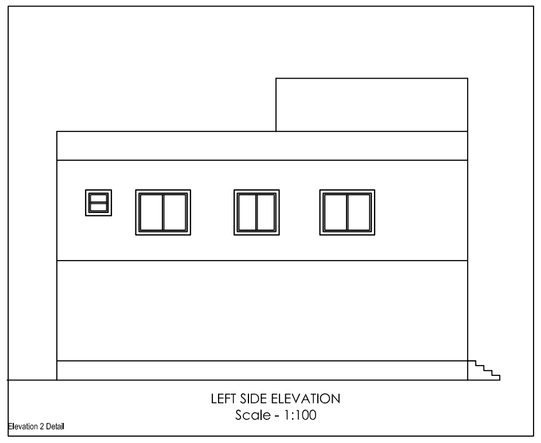

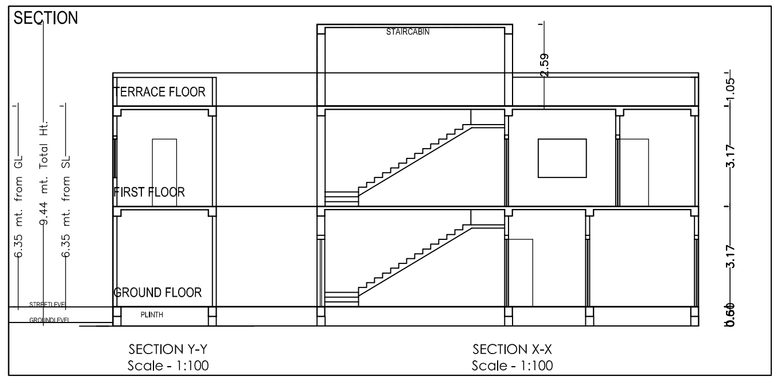

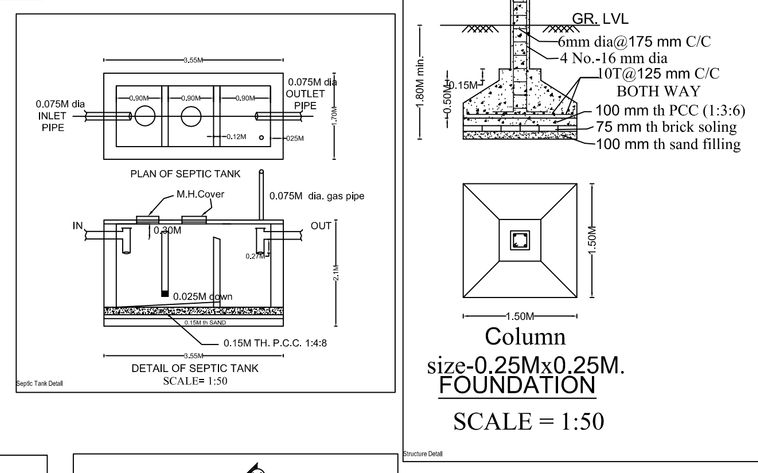

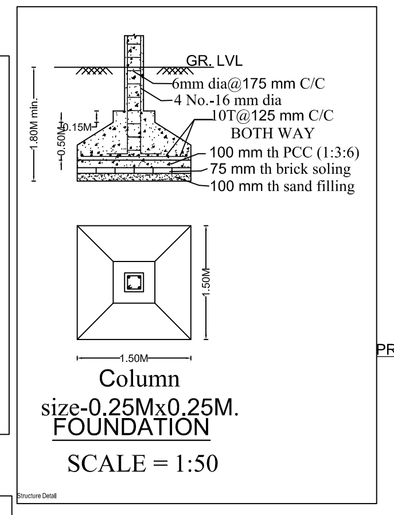

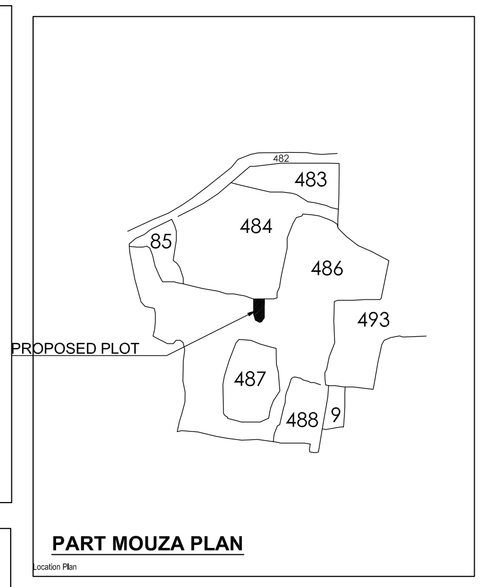

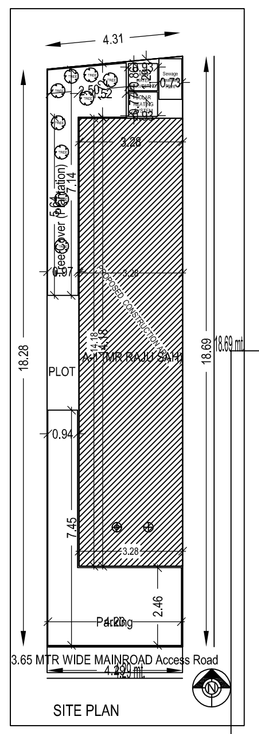

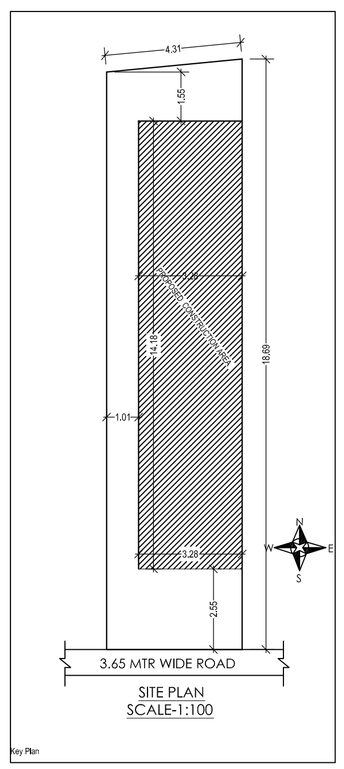

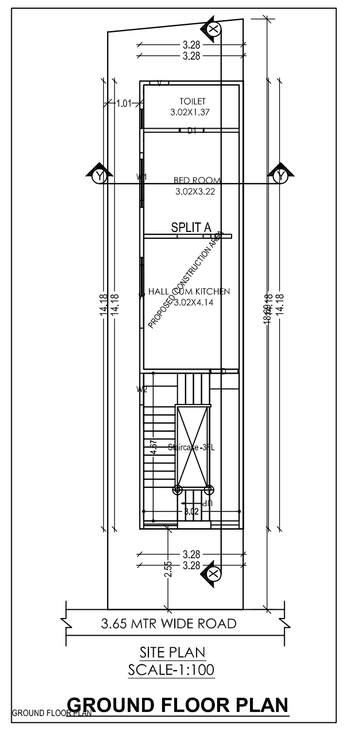

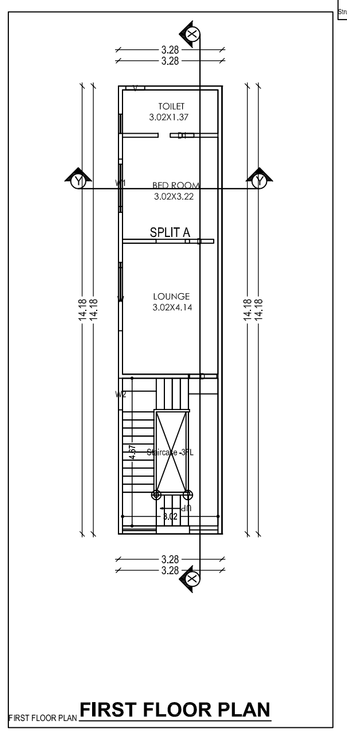

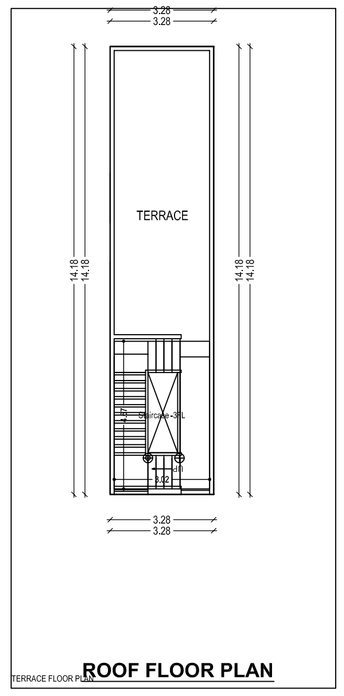

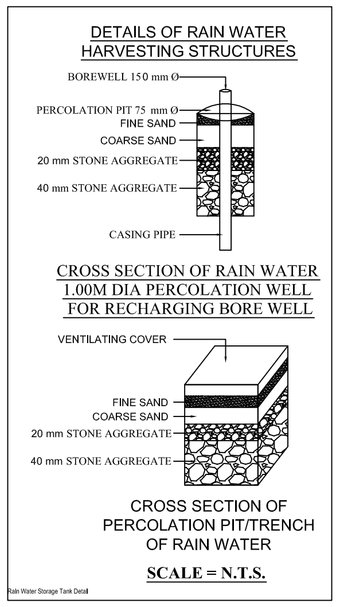

AREA STATEMENT: PAKUR NAGAR PARISHAD	VERSION NO.: 1.0.15
	VERSION DATE: 30/06/2018
PROJECT DETAIL :	
Inward_No. : -	Plot Use : Residential
Region : JHARKHAND URBAN LOCAL BODIES	Plot SubUse : Residential Bldg/Apartment
District : PAKUR	Land Use Zone : NA
Application Type : General Proposal	Abutting Road Width : -
Project Type : Building Permission	Plot No. : -
Nature of Development : New	Revenue Survey No/Survey No : -
Location : Old Area	Thana No : -
Sub Location : NA	Holding No : -
Village/Mauza Name : -	Khata No : -
Ward No : -	North : -
Road/Street : -	South : -
	East : -
	West : -

AREA DETAILS :		SQ.MT.
AREA OF PLOT (Minimum)	(A)	79.30
Net Plot Area (Gross Plot Area - Deduction from Gross Plot area)	(A-Deductions)	79.30
Deductions for Balance Plot Area (from Gross Plot Area)		
COP Area		9.45
Total		9.45
Balance Plot Area (Net Plot Area - Recreational/Amenity space)	(A-Deductions)	69.85
Plot Area for Coverage (Net Plot Area)	(A-Deductions)	79.30
Plot Area for FSI (Net Plot Area + Road/Widening Area)	(A-Deductions)	79.30
Accessory/Use Area		0.93
COVERAGE CHECK		
Proposed Coverage Area (58.57 %)		46.45
Total Coverage Area (58.57 %)		46.45
FAR CHECK		
Proposed Area of FAR		92.90
Total Area of FAR		92.90
BUILT UP AREA CHECK		
Total Proposed BuiltUp Area		92.90

ARCH / ENGG / SUPERVISOR (Regd)	OWNER
DEVELOPMENT AUTHORITY	LOCAL BODY

COLOR INDEX

- PLOT BOUNDARY
- ABUTTING ROAD
- PROPOSED WORK (COVERAGE AREA)
- EXISTING (To be retained)
- EXISTING (To be demolished)

Color Index:

PARKING CALCULATION:

Parking Type	Prop No.	Prop Area
Other Parking	1	15.07
Total Area	1	15.07

MARGIN DETAIL:

Building / Wing Name	Road Name	Front Margin	Rear Margin	Side1 Margin	Side2 Margin
A-1 (MR RAJU SAH)	3.65 MTR WIDE MAINROAD Access Road	2.55	1.64	1.01	0.00

FAR & Tenement Details (Table 4c-1)

Building	No. of Same Bldg	Total Built Up Area (Sq.mt.)	Proposed FAR Area (Sq.mt.) Resi.	Total FAR Area (Sq.mt.)	Tnmt (No.)
A (MR RAJU SAH)	1	92.90	92.90	92.90	01
Grand Total :	1	92.90	92.90	92.90	01

PROPOSED RESIDENTIAL BUILDING PLAN FOR

LAND OWNER

MR RAJU SAH

S/O- LATE DHANESHWAR SAH

DETAILS OF PLOT :-

PLOT NO :- 486
KHATA NO :-430
MOUZA :- PAKUR
WARD NO :-06
THANA NO:-68
DISTRICT :- PAKUR, JHARKHAND

SIGNATURE OF OWNER'S

SIGNATURE OF ENAGINEER'S

A (MR RAJU SAH)

Building :A (MR RAJU SAH)

Floor Name	Total Built Up Area (Sq.mt.)	Proposed FAR Area (Sq.mt.) Resi.	Total FAR Area (Sq.mt.)	Tnmt (No.)
Ground Floor....	46.45	46.45	46.45	01
First Floor....	46.45	46.45	46.45	00
Terrace Floor....	0.00	0.00	0.00	00
Total :	92.90	92.90	92.90	01
Total Number of Same Buildings	1			
Total :	92.90	92.90	92.90	01

SCHEDULE OF JOINERY:

BUILDING NAME	NAME	LENGTH	HEIGHT	NOS
A (MR RAJU SAH)	D1	0.75	2.13	02
A (MR RAJU SAH)	D	0.90	2.13	04
Total	-	-	-	06

SCHEDULE OF JOINERY:

BUILDING NAME	NAME	LENGTH	HEIGHT	NOS
A (MR RAJU SAH)	V	0.60	1.00	02
A (MR RAJU SAH)	W2	1.00	2.50	02
A (MR RAJU SAH)	W1	1.50	2.50	02
A (MR RAJU SAH)	W	2.00	2.50	02
Total	-	-	-	08

UnitBUA Table for Building :A (MR RAJU SAH)

FLOOR	Name	UnitBUA Type	UnitBUA Area	Carpet Area	No. of Rooms	No. of Tenement
GROUND FLOOR PLAN	SPLIT A	FLAT	54.38	54.11	3	1
Total	-	-	54.38	54.11	6	1