Project Title :MADHUMATI GHOSH

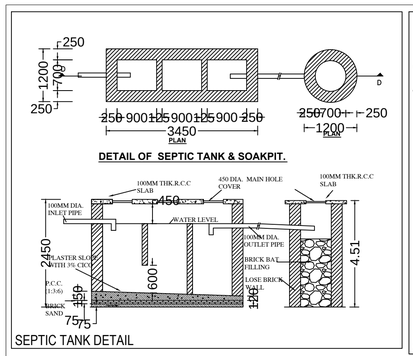

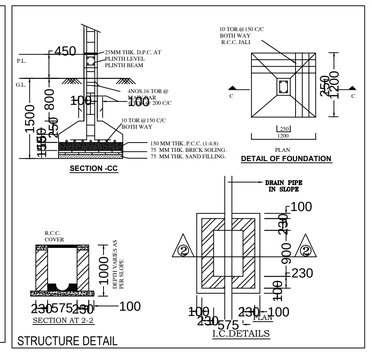

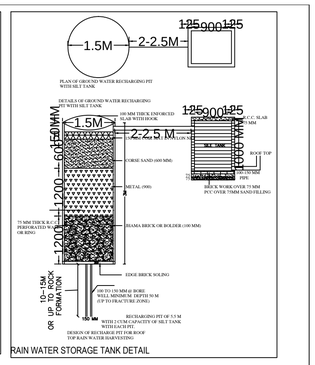

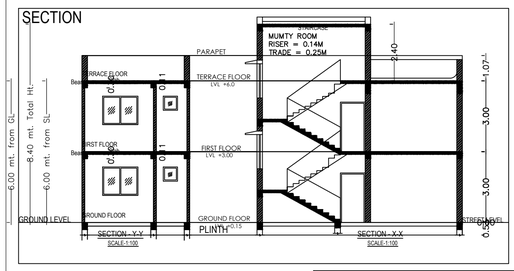

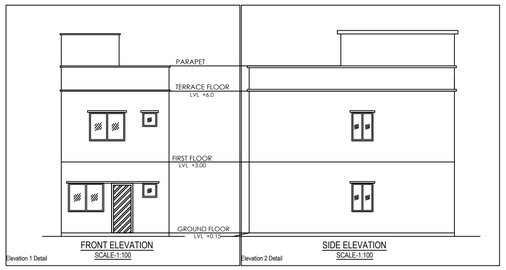

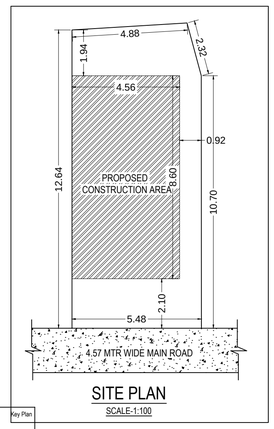

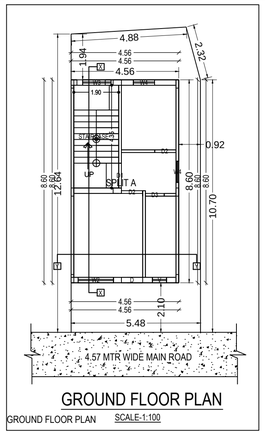

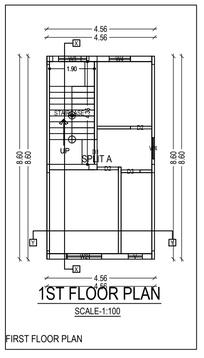

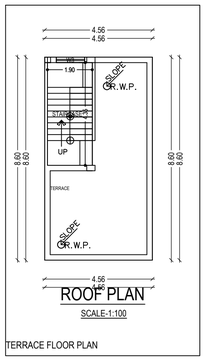

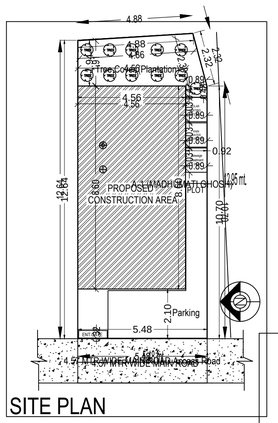

AREA STATEMENT: PAKUR NAGAR PARISHAD	VERSION NO.: 1.0.27
	VERSION DATE: 16/10/2020
PROJECT DETAIL :	
Inward_No. : -	Plot Use : Residential
Region : JHARKHAND URBAN LOCAL BODIES	Plot SubUse : Bungalow/ Dwelling / Non Apartment
District : PAKUR	Land Use Zone : NA
Application Type : General Proposal	Abutting Road Width : -
Project Type : Building Permission	Plot No. : -
Nature of Development : New	Revenue Survey No/Survey No : -
Location : Old Area	Thana No : -
Sub Location : NA	Holding No : -
Village/Mauza Name : -	Khata No : -
Ward No : -	North : -
Road/Street : -	South : -
	East : -
	West : -

AREA DETAILS :		SQ.MT.
AREA OF PLOT (Minimum)	(A)	69.43
Net Plot Area (Gross Plot Area - Deduction from Gross Plot area)	(A-Deductions)	69.43
Deductions for Balance Plot Area (from Gross Plot Area)		
COP Area		11.08
Total		11.08
Balance Plot Area (Net Plot Area - Recreational/Amenity space)	(A-Deductions)	58.34
Plot Area for Coverage (Net Plot Area)	(A-Deductions)	69.43
Plot Area for FSI (Net Plot Area + Road/Widening Area)	(A-Deductions)	69.43
Accessory Use Area		0.92
COVERAGE CHECK		
Proposed Coverage Area (56.45 %)		39.19
Total Coverage Area (56.45 %)		39.19
FAR CHECK		
Proposed Area of FAR		78.38
Total Area of FAR		78.38
BUILT UP AREA CHECK		
Total Proposed BuiltUp Area		78.38
ARCH / ENGG / SUPERVISOR (Regd)		OWNER
DEVELOPMENT AUTHORITY		LOCAL BODY

COLOR INDEX

- PLOT BOUNDARY
- ABUTTING ROAD
- PROPOSED WORK (COVERAGE AREA)
- EXISTING (To be retained)
- EXISTING (To be demolished)

Color Index:

PARKING CALCULATION:

Parking Type	Prop No.	Prop Area
Other Parking	1	12.53
Total Area	1	12.53

MARGIN DETAIL:

Building / Wing Name	Road Name	Front Margin	Rear Margin	Side1 Margin	Side2 Margin
A-1 (MADHUMATI GHOSH)	4.57 MTR WIDE MAIN ROAD Access Road	2.10	1.94	0.88	0.00

FAR & Tenement Details (Table 4c-1)

Building	No. of Same Bldg	Total Built Up Area (Sq.mt.)	Proposed FAR Area (Sq.mt.) Resi.	Total FAR Area (Sq.mt.)	Tnmt (No.)
A (MADHUMATI GHOSH)	1	78.38	78.38	78.38	01
Grand Total :	1	78.38	78.38	78.38	01

APPROVED:-

SPL.OFFICER, M.N.A.C.

GENERAL SPECIFICATION :-

FOUNDATION	: PLAIN CEMENT CONCRETE AS PER DESIGN. : R.C.C. COLUMN FOOTING & COLUMN AS PER STRUCTURAL DESIGN. : R.C.C. COLUMN & BEAM AS PER STR . DESIGN.
SUPER STRUCTRE	: 0.23M.THK. EXT. WALL & 0.125M.THK. PARTITION WALL IN CEMENT MORTAR. : R.C.C. ROOF SLAB AS PER STRUCTURAL DESIGN.
FLOOR	: MOSAIC CAST IN SITU CERAMIC TILES DADO IN TOILET.
INTERNAL FINISH	: CEMENT PLASTER WITH P.O.P & O.B.D.
SANITARY	: VITROUS CHAINA CLAY SANITARY WARE G.I. PIPE WATER SUPPLY. P.V.C.PIPE FOR SEWAGE DISPOSAL.
DOORS & WINDOW	: AS PER SCHEDULE.
ELECTRICAL	: COPPER WIRE WITH P.V.C. CONDUIT.

LAND DETAILS

PROPOSED RESIDENTIAL BUILDING PLAN OF

MADHUMATI GHOSH

W/O MR. SANAT GHOSH

PLOT NO. - 1321, KHATA NO.- 588

VILLAGE - BALIHARPUR, PAKUR

WARD NO- 4, THANA NO - 128

DISTRICT. - PAKUR

STATE :- JHARKHAND.

Applicant's Signature.	SIGNATURE OF LIC. ENGINEER

Building :A (MADHUMATI GHOSH)

Floor Name	Total Built Up Area (Sq.mt.)	Proposed FAR Area (Sq.mt.) Resi.	Total FAR Area (Sq.mt.)	Tnmt (No.)
Ground Floor...	39.19	39.19	39.19	01
First Floor...	39.19	39.19	39.19	00
Terrace Floor...	0.00	0.00	0.00	00
Total :	78.38	78.38	78.38	01
Total Number of Same Buildings	1			
Total :	78.38	78.38	78.38	01

SCHEDULE OF JOINERY:

BUILDING NAME	NAME	LENGTH	HEIGHT	NOS
A (MADHUMATI GHOSH)	D3	0.80	2.10	02
A (MADHUMATI GHOSH)	D	0.90	2.10	01
A (MADHUMATI GHOSH)	D2	0.90	2.10	04
A (MADHUMATI GHOSH)	D1	1.05	2.10	02
Total	-	-	-	09

SCHEDULE OF JOINERY:

BUILDING NAME	NAME	LENGTH	HEIGHT	NOS
A (MADHUMATI GHOSH)	V	0.60	1.00	02
A (MADHUMATI GHOSH)	W4	0.90	1.20	04
A (MADHUMATI GHOSH)	W3	1.20	1.20	03
A (MADHUMATI GHOSH)	W2	1.50	2.10	02
Total	-	-	-	11

UnitBUA Table for Building :A (MADHUMATI GHOSH)

FLOOR	Name	UnitBUA Type	UnitBUA Area	Carpet Area	No. of Rooms	No. of Tenement
GROUND FLOOR PLAN	SPLIT A	FLAT	70.45	67.48	4	1
Total:	-	-	70.45	67.48	8	1