PRODUCED BY AN AUTODESK EDUCATIONAL PRODUCT

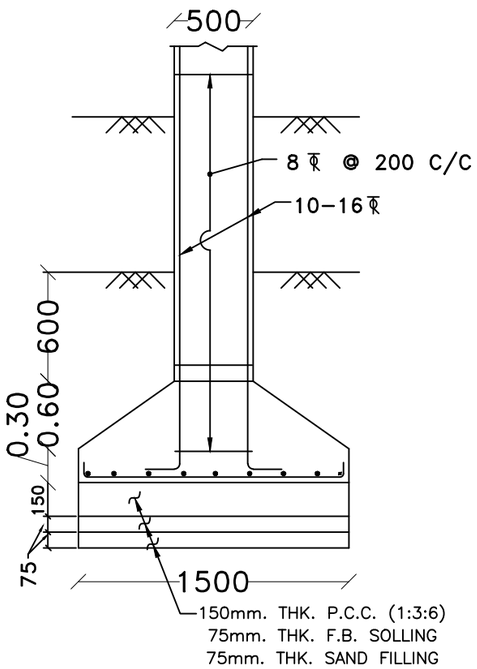

SECTION 4-4

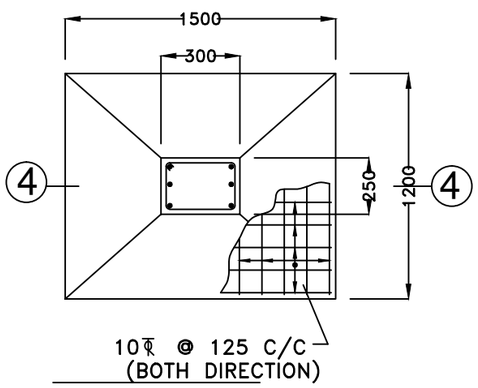

FOUNDATION PLAN OF COLUMN

Structure Detail

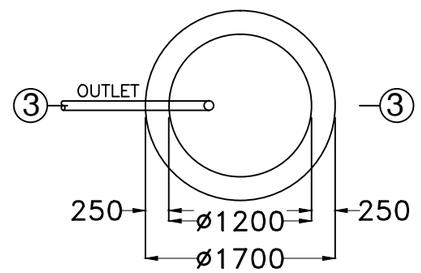

PLAN OF SOAK PIT
(SCALE 1:50)

Structure Detail

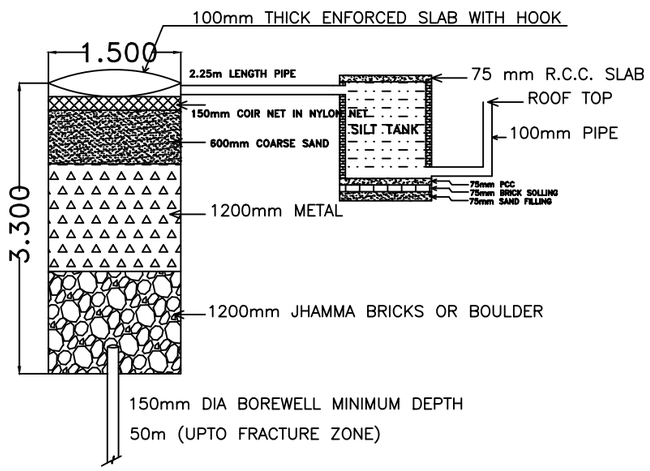

RECHARGE BOREWEL

Rain Water Storage Tank Detail

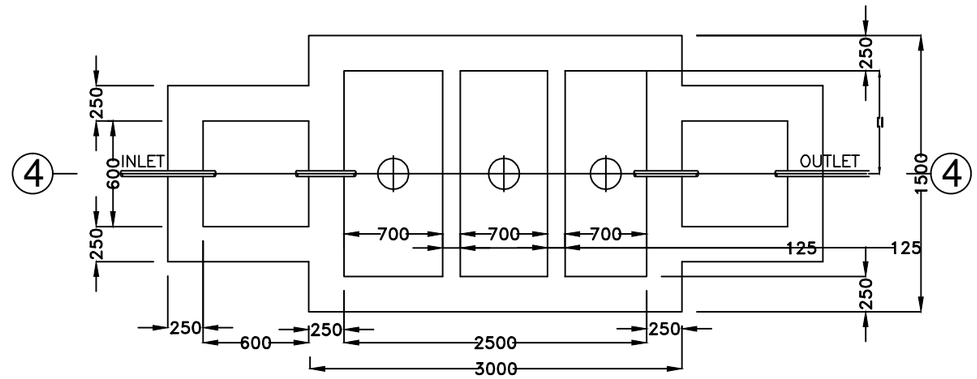

PLAN OF SEPTIC TANK
(SCALE 1:50)

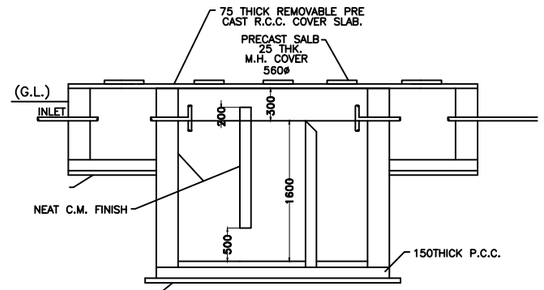

SECTION 4-4
(SCALE 1:50)

Septic Tank Detail

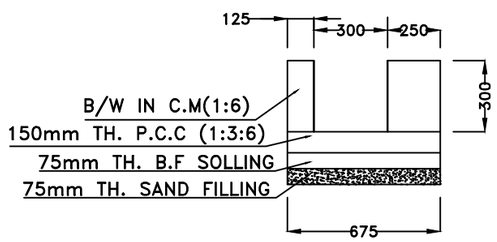

SECTION OF DRAIN
SLOPE OF DRAIN=1:200

PRODUCED BY AN AUTODESK EDUCATIONAL PRODUCT

PRODUCED BY AN AUTODESK EDUCATIONAL PRODUCT

PRODUCED BY AN AUTODESK EDUCATIONAL PRODUCT