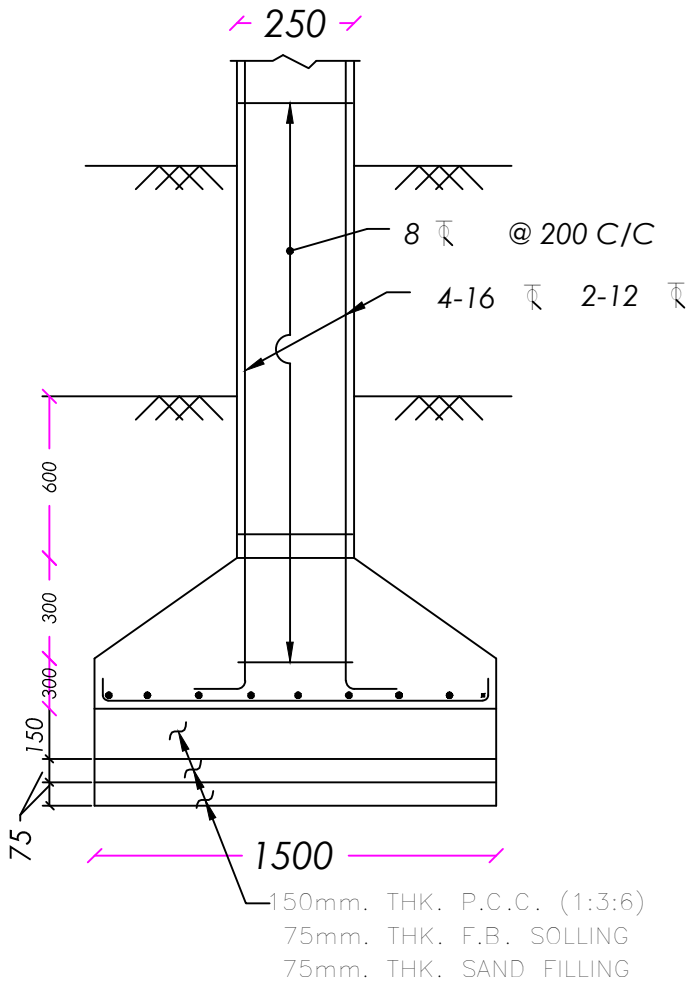

SECTION 4–4

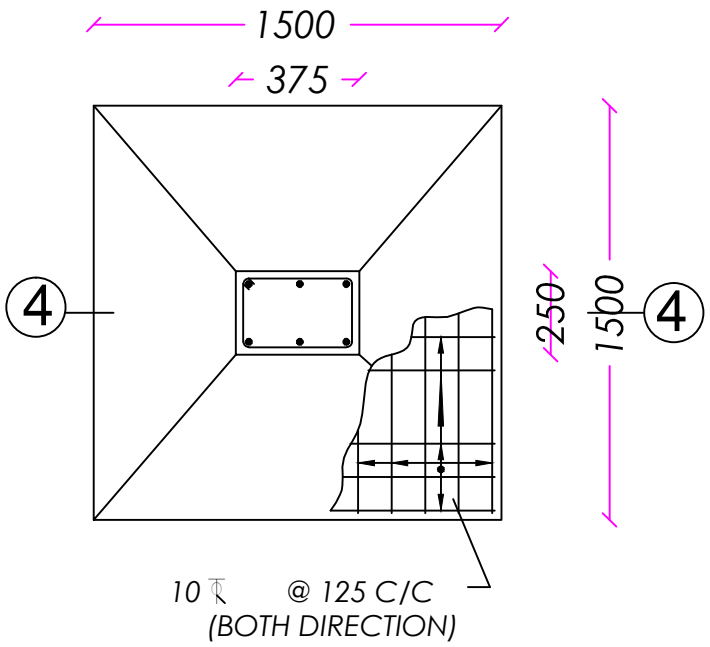

FOUNDATION PLAN OF COLUMN

Structure Detail