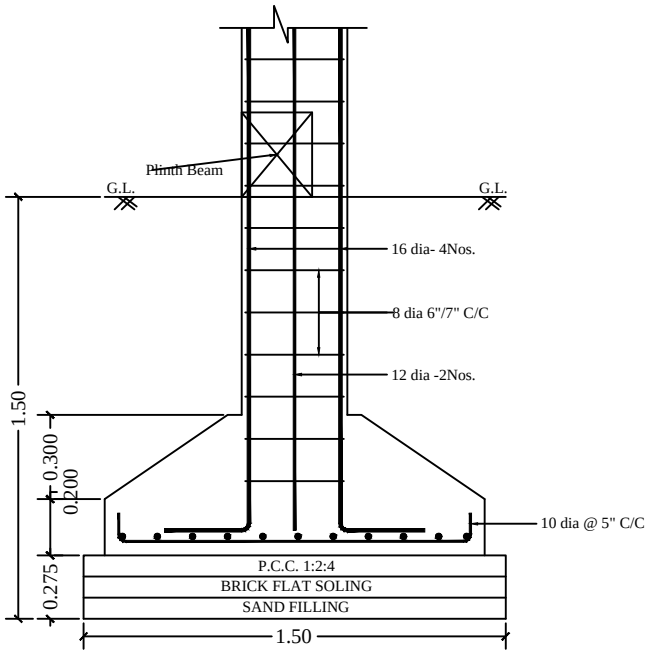


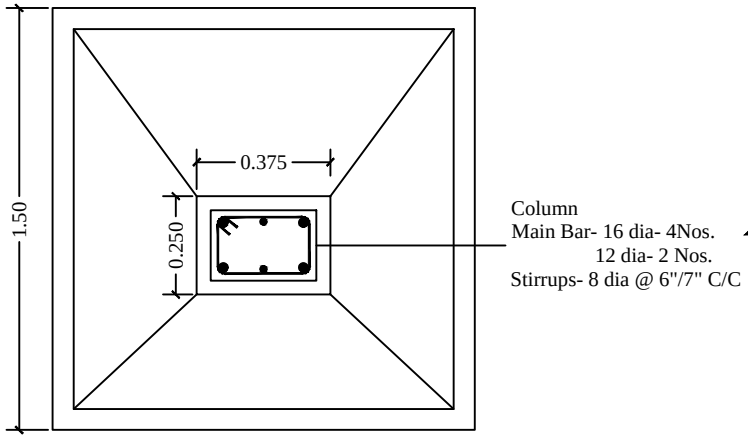


**FOOTING PLAN & SECTION**

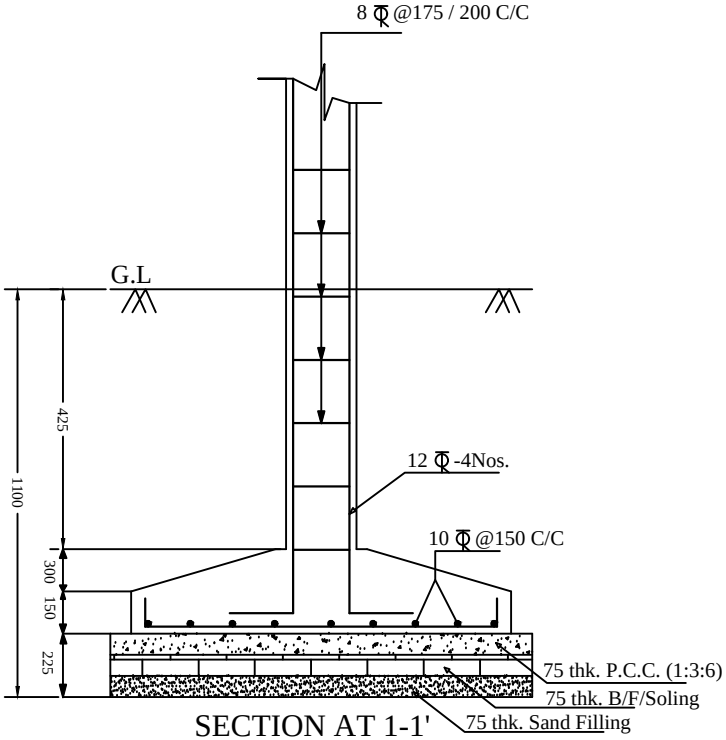


SECTION AT 1-1'
SCALE -1:25

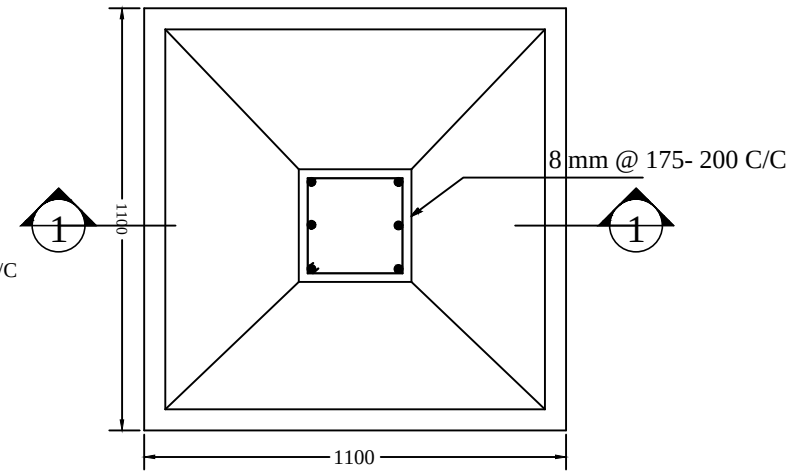


6 Nos.- 12 mm Dia Bar

TYPICAL FOUNDATION
SCALE -1:25

Structure Detail