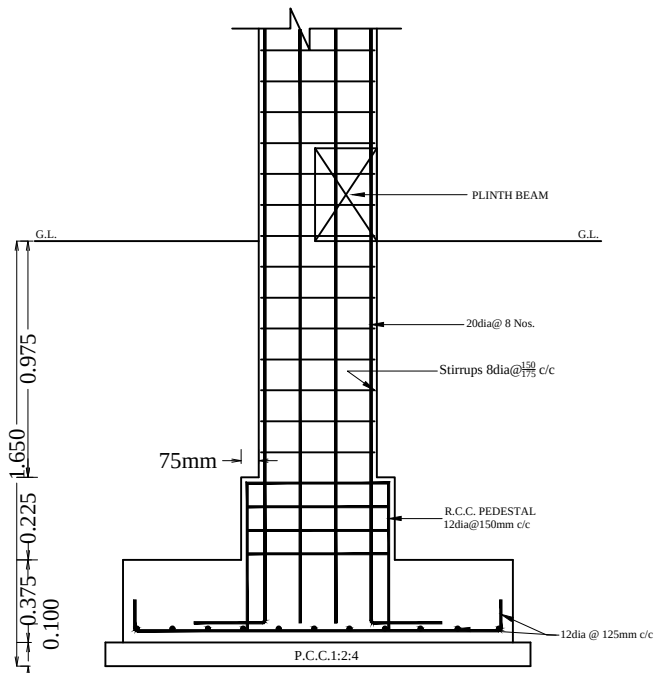

FOOTING SECTION

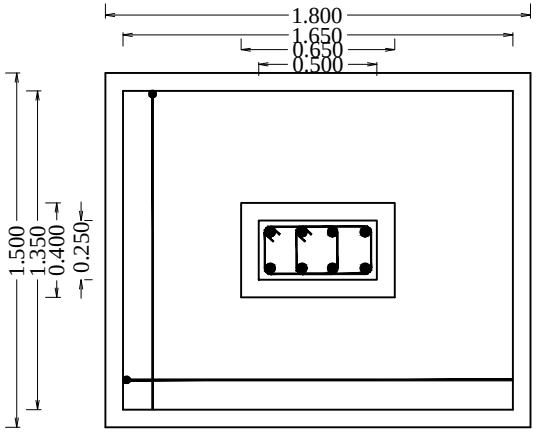

FOOTING PLAN

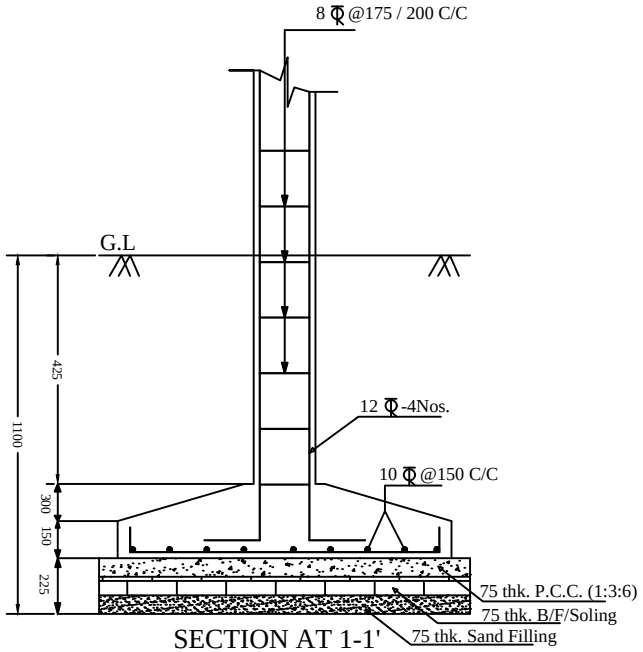

SECTION AT 1-1'
SCALE -1:25

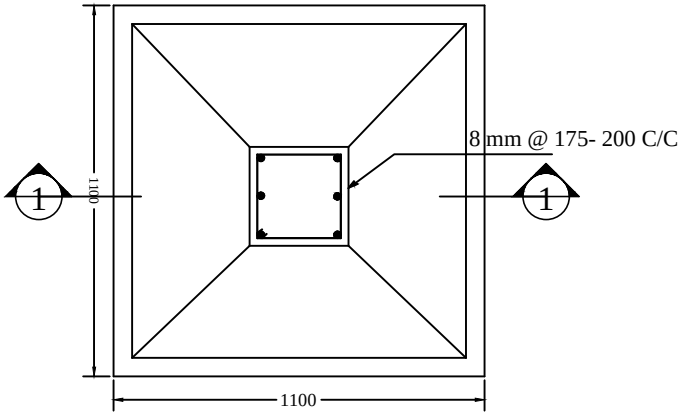

6 Nos.- 12 mm Dia Bar

TYPICAL FOUNDATION
SCALE -1:25