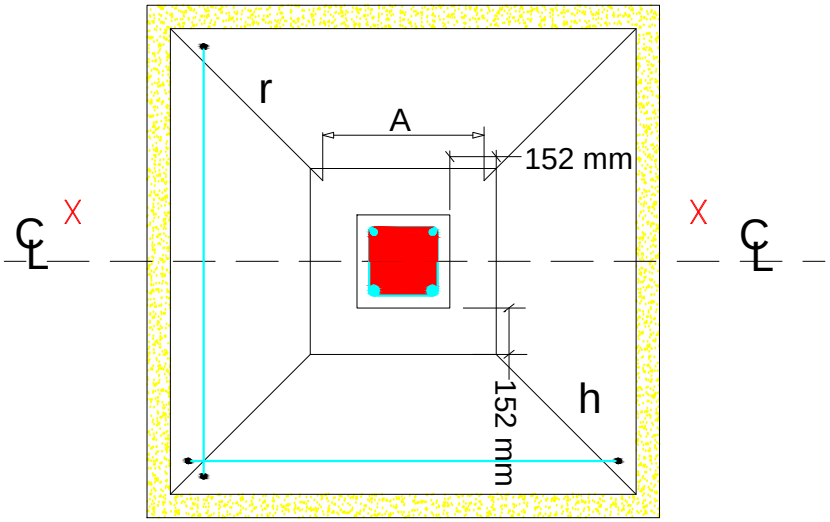

CROSS SECTION OF FOOTING

SCALE 1:25

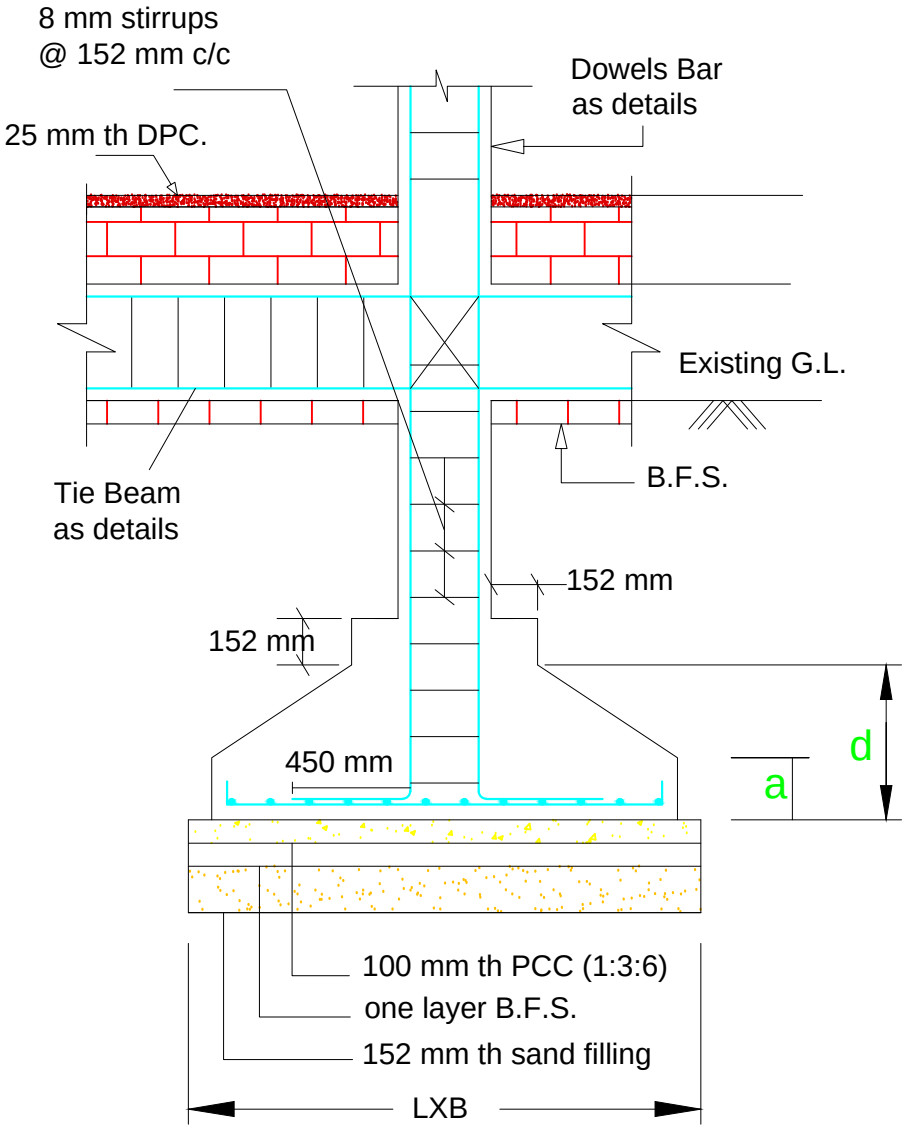

SECTION DETAIL OF FOOTING

SCALE 1:25

Structure Detail