FOOTING DETAILS

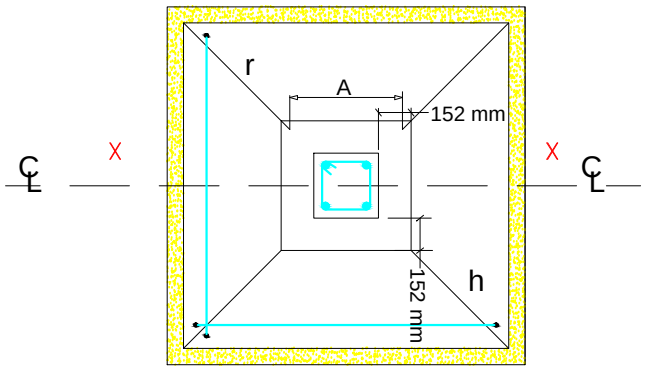

CROSS SECTION OF FOOTING

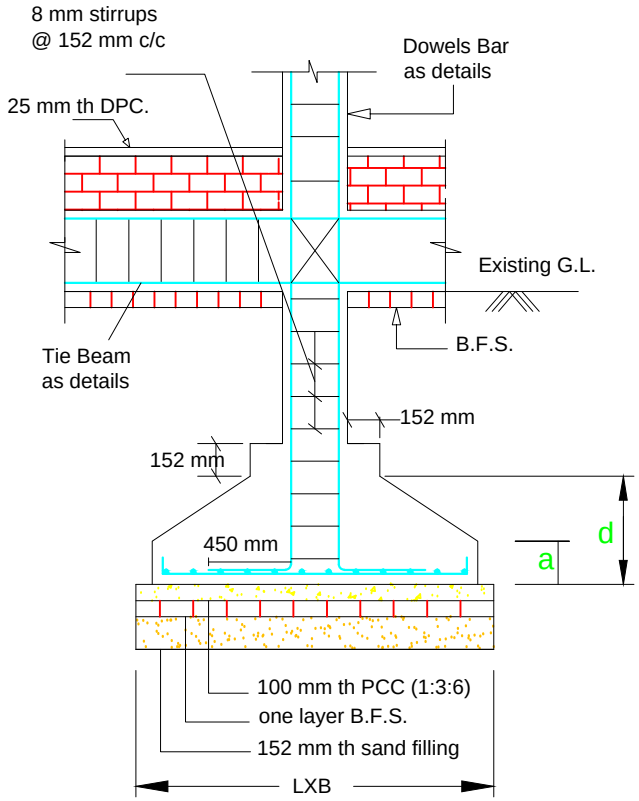

SECTION DETAIL OF FOOTING

Structure Detail