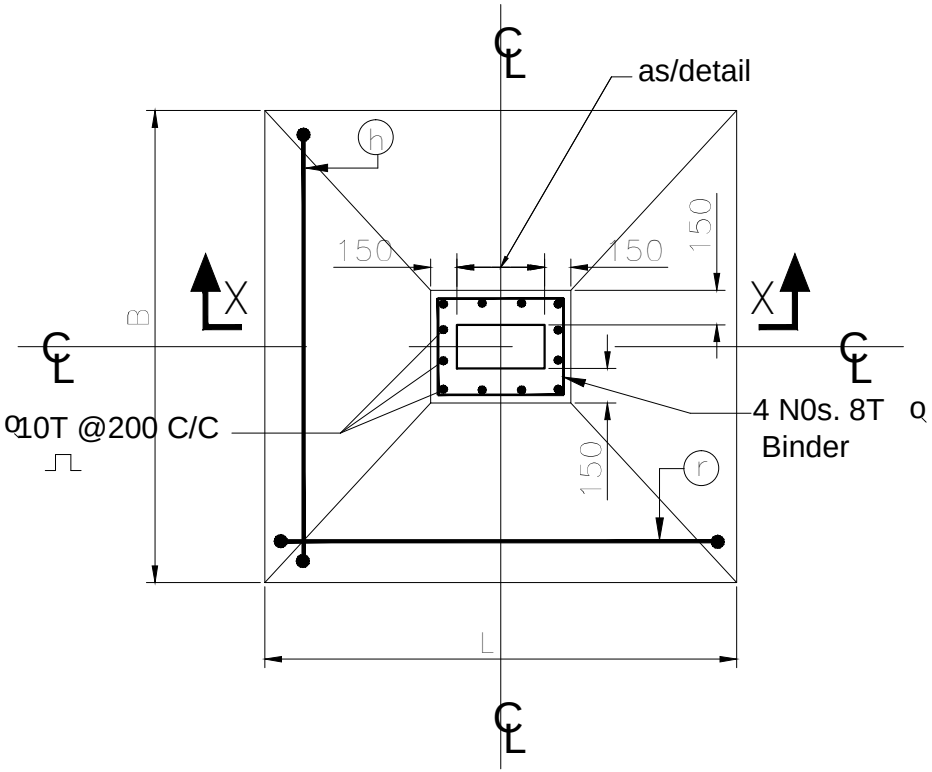

TYP DETAIL OF ISOLATED FOOTING

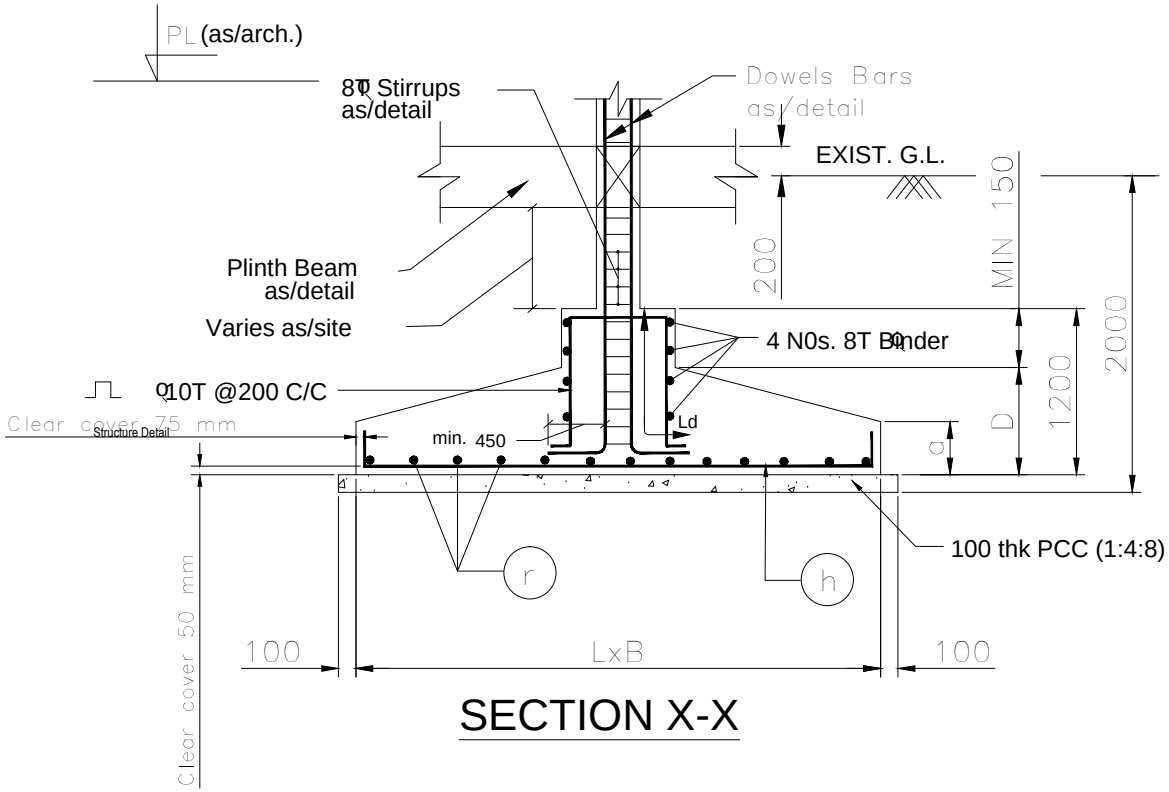

SECTION X-X