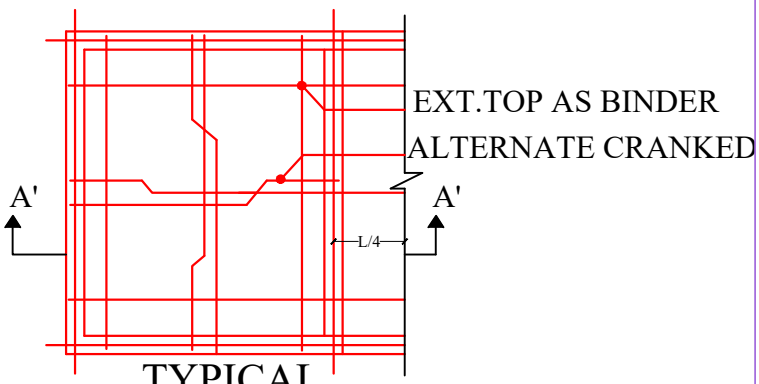

TYPICAL

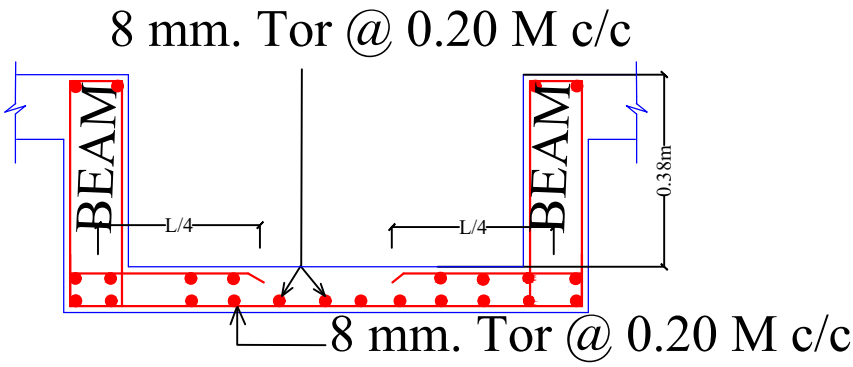

THICKNESS OF SLAB = 0.11m

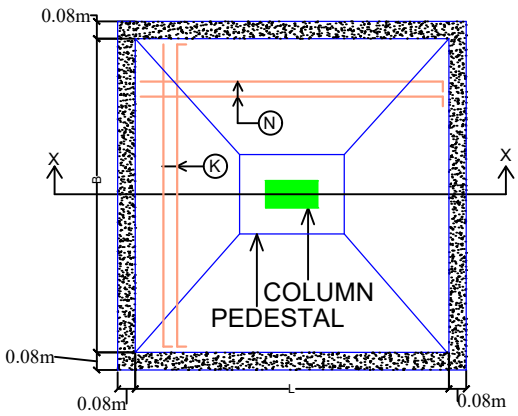

PLAN OF ISOLATED FOOTING

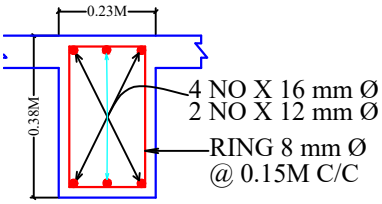

C.S. OF ROOF BEAM
SIZE - 0.23M X 0.38M

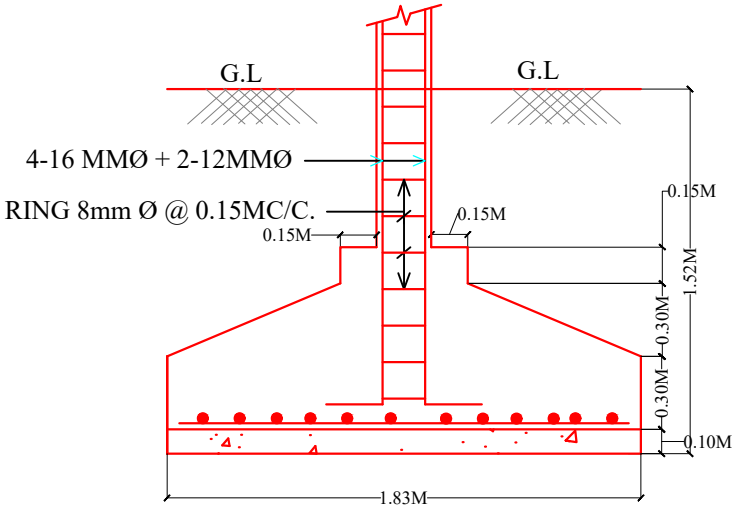

SECTION OF FOOTING

Structure Detail