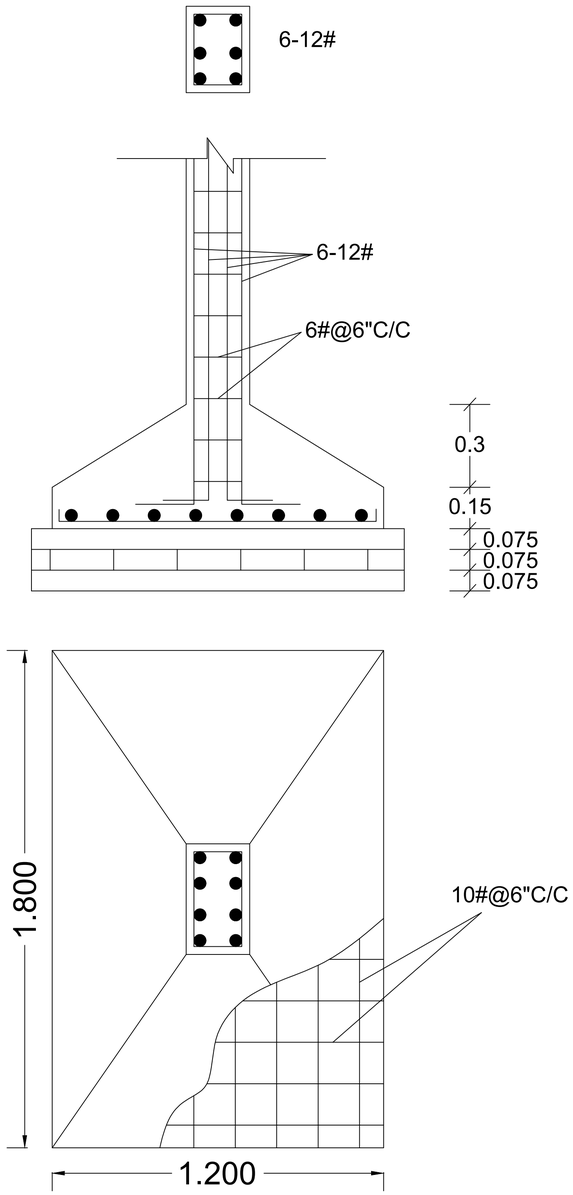

COLUMN DETAILS

SCALE:- 1:50

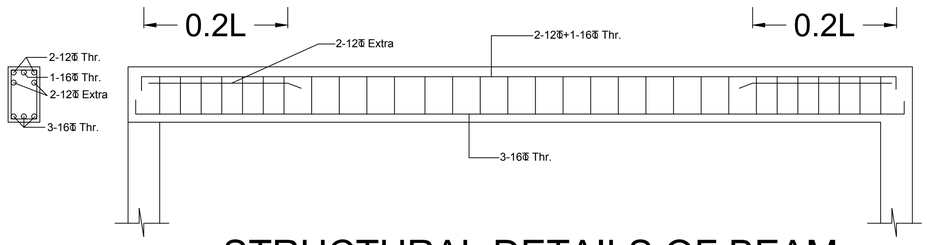

STRUCTURAL DETAILS OF BEAM

SLAB SCHEDULE (CONC. GRADE M 20)

THICKNESS OF SLAB = 4.5 "(EXCEPT MENTIONED OTHERWISE

S.NO.	SLAB MARKED	THK.	AT SMALLER SPAN alternate cranked	AT LONGER SPAN at support
1.	S1	0.1m	08 mm. Tor 0.18m c/c alternate cranked at support	08 mm. Tor 0.18m c/c alternate cranked at support

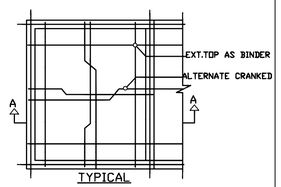

TYPICAL

REINFORCEMENT DETAILS OF SLAB

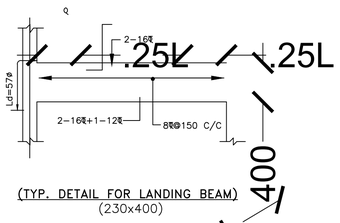

(TYP. DETAIL FOR LANDING BEAM)
(230x400)

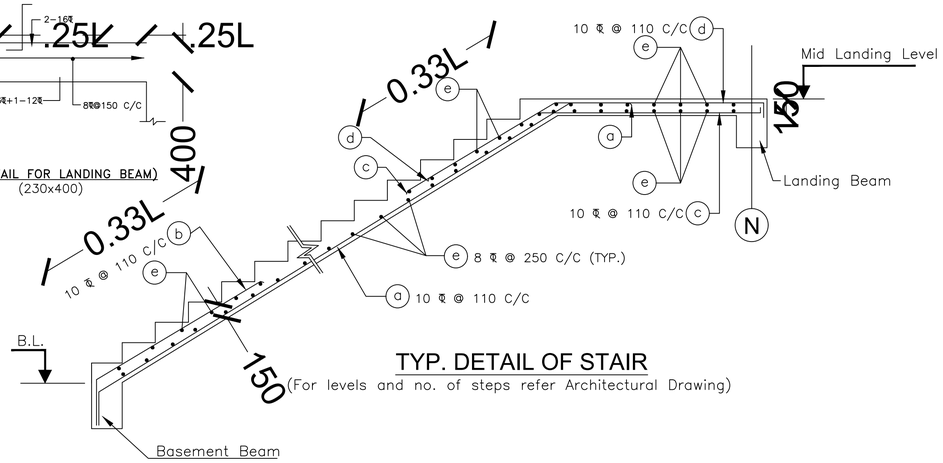

TYP. DETAIL OF STAIR

(For levels and no. of steps refer Architectural Drawing)

Structure Detail