PRODUCED BY AN AUTODESK EDUCATIONAL PRODUCT

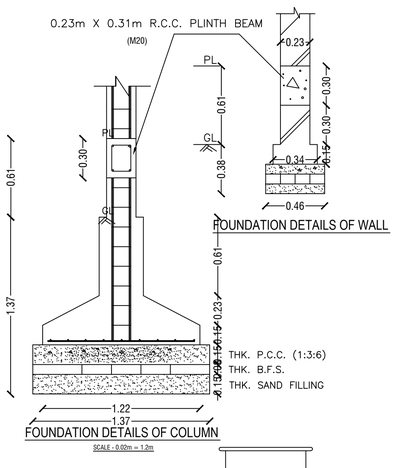

FOUNDATION DETAILS OF COLUMN

SCALE - 0.02m = 1.2m

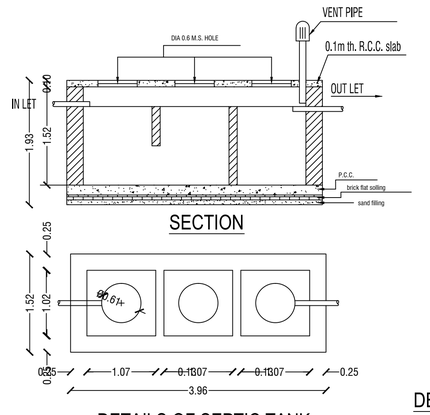

FOUNDATION DETAILS OF WALL

SECTION

DETAILS OF SEPTIC TANK

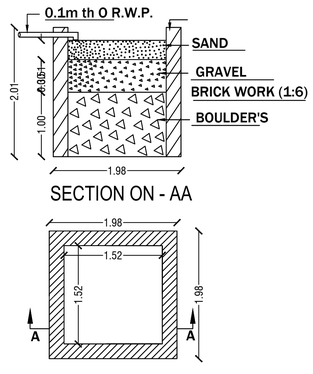

SECTION ON - AA

DETAIL'S OF WATER HARVESTING

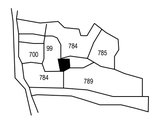

KEY PLAN

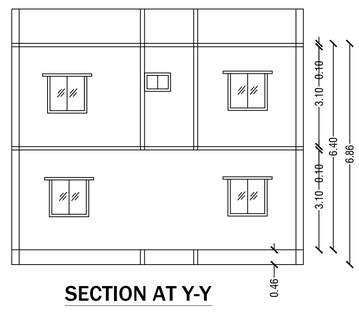

SECTION AT Y-Y

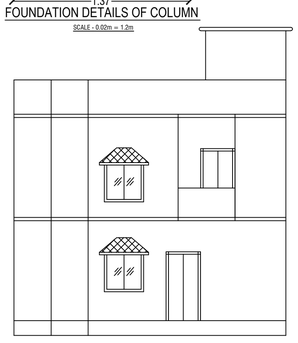

FRONT ELEVATION

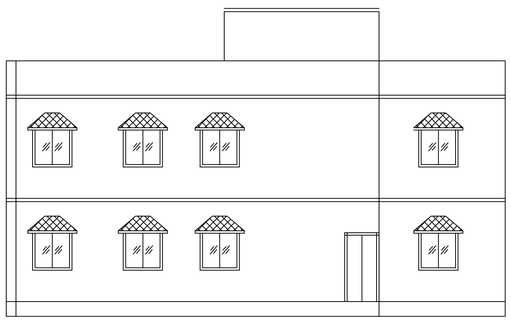

SIDE ELEVATION

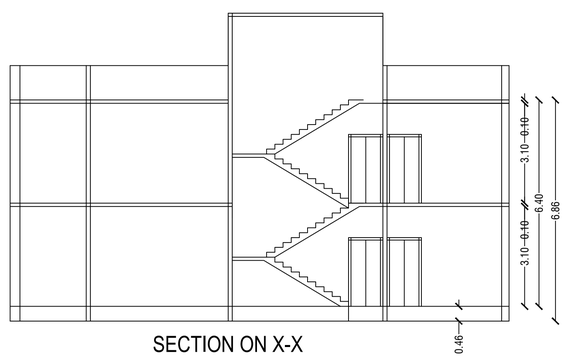

SECTION ON X-X

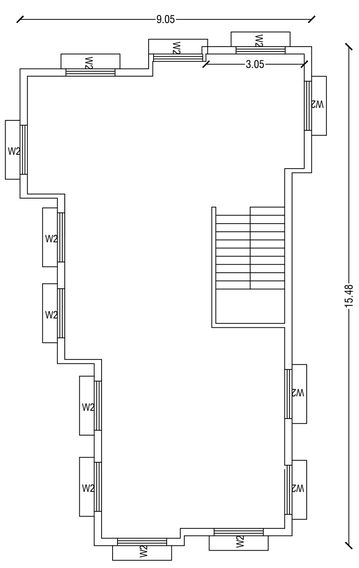

GROUND FLOOR PLAN

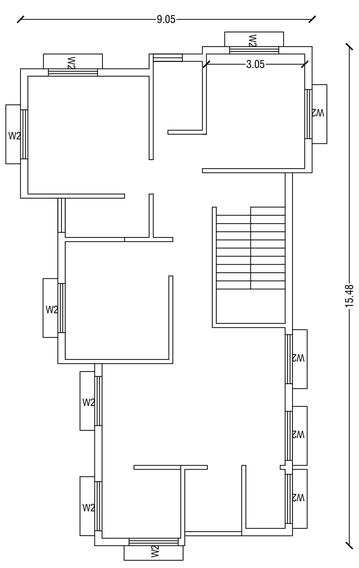

FIRST FLOOR PLAN

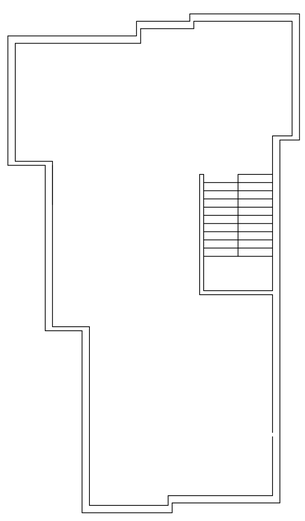

TERRACE FLOOR PLAN

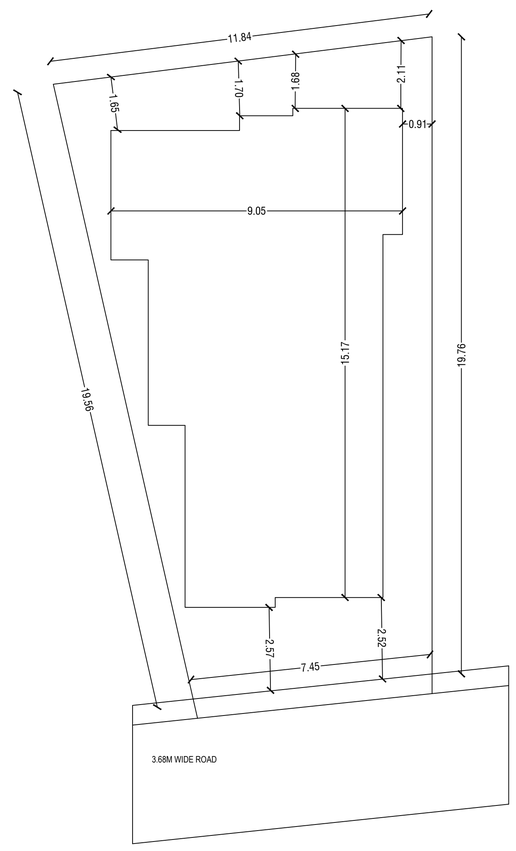

SITE PLAN

BRIEF SPECIFICATION

FOUNDATION :- R.C.C. (1:1.5:3) Column footing foundation.

PLINTH :- 12"th R.C.C. (1:1.5:3) all round on plinth level.

FLOORING :- 1.5"th Marble. flooring over 3"th P.C.C. (1:3:6).

SUPER STRUCTURE :- First class brick work in cement mortar (1:6).

SLAB,BEAM, stairs & LINTEL :- All R.C.C. work (1:1.5:3).

WOOD WORK :- All door & window frames of sal wood

PLASTERING :- 12mm cement plaster (1:6) both side.

SCHEDULE

D1 - 1.07 X 2.13	W - 0.9 x 1.22
D2 - 0.9 X 2.13	W1 - 1.22 x 1.22
D3 - 0.76 x 2.13	W2 - 1.5 x 1.22
CG - 1.22 x 2.13	V - 0.61 x 0.61

DETAILS OF AREA

1).LAND AREA :- 188.46 SQM
2).GROUND FLOOR AREA :- 109.90 SQM
3).FIRST FLOOR AREA :- 109.90 SQM
4).COVERED AREA :- 219.80 SQM
5).% OF PLINTH AREA :- 58.31
6).F.A.R :- 1.16

TITLE OF DRAWING

PROPOSED RESIDENTIAL BUILDING PLAN OF SMT RANJU DEVI W/O SRI ARVIND PRASAD . UNDER MOUZA .- BISHUNPUR , MOUZA NO.- 05 , KHATA NO.- 23, PLOT NO. - 60 , IN THE DISTRICT OF DHANBAD .

SIG. OF OWNER

SIG. OF ENGINEER

PRODUCED BY AN AUTODESK EDUCATIONAL PRODUCT
PRODUCED BY AN AUTODESK EDUCATIONAL PRODUCT
PRODUCED BY AN AUTODESK EDUCATIONAL PRODUCT